WKD 948 420 **08** 03/07

Porsche, the Porsche Crest, Cayenne, Tiptronic and Tequipment are registered trademarks of Dr. Ing. h.c. F. Porsche AG.

Printed in Germany.

Reprinting, even of excerpts, or duplication of any type is only permissible with the written authorisation of Dr. Ing. h.c. F. Porsche AG.

© Dr. Ing. h.c. F. Porsche AG
Porscheplatz 1
D-70435 Stuttgart

48268

On-board literature

Please always keep this literature in the vehicle and please hand it over to the new owner if you sell your vehicle.

Suggestions

Do you have any questions, suggestions or ideas for your vehicle or for the on-board literature? Please write to us:

Dr. Ing. h.c. F. Porsche AG
Sales Customer Relations
Porschestraße 15-19
71634 Ludwigsburg

Orientation guides in the Driver's Manual

The orientation guides in the Driver's Manual are highlighted in yellow in each case.

Overall table of contents

At the start of the Driver's Manual you will find an overview of the overall contents of the Driver's Manual.

Section contents

There is a summary of topics with the corresponding page numbers at the beginning of each main chapter.

Index

There is a detailed, alphabetical index at the end of this Driver's Manual.

Equipment

Because our vehicles undergo continuous development, equipment and specification may not be as illustrated or described in this Driver's Manual.

Items of equipment are sometimes optional or vary depending on legal requirements or on the country in which the vehicle is sold. Your Porsche partner will be pleased to advise you on retrofitting such equipment.

Should your Porsche be fitted with any equipment not described in this Manual, your Porsche partner will be glad to provide information concerning correct operation and care of the items concerned.

Because of different legal requirements in individual countries, the equipment in your vehicle may vary slightly from that described in this Driver's Manual.

Recycling

Only in European Union countries: Returning end-of-life vehicles

Porsche AG will arrange for your old Porsche to be recycled in an environmentally friendly manner, free of charge.

▷ To return your vehicle and obtain the relevant Certificate of Destruction, please consult your Porsche partner, which will gladly assist you in disposing of your old vehicle.

Technical modifications

▷ Modifications may be carried out on your vehicle only if approved by Porsche.
This ensures that your Porsche will remain reliable and safe to drive, and that it will not be damaged as a result of the modifications.
Your Porsche partner will be pleased to advise you.

⚠ Safety notes!

▷ Only use genuine Porsche spare parts for your vehicle or spare parts of similar quality which have been manufactured according to the specifications and production requirements of Porsche. These parts are available from your Porsche partner or a qualified specialist workshop. Accessories which are relevant to safety should not be used unless they have been obtained from the Porsche Tequipment product range or have been tested and approved by Porsche. Your Porsche partner will be pleased to advise you and answer any of your questions.
However, the use of other parts or accessories may adversely affect the safety of your vehicle, and Porsche can take no responsibility for any loss or damage caused by their use. Even if the supplier of other accessories or parts is a recognised supplier, the safety of your vehicle may still be affected if such items are installed. Due to the large variety of products offered in the accessory market, it is not possible for Porsche to inspect and approve every one.

▷ In addition, please note that the use of replacement parts which not approved by Porsche may also detrimentally affect the Warranties relating to your vehicle.

▷ Regularly check your vehicle for signs of damage. Damaged or missing aerodynamic components such as spoilers or underside panels affect the driving behaviour and therefore must be replaced immediately.

Table of contents

Overview Illustrations..... 6

Driver's cockpit 7
Steering wheel and instrument cluster 8
Centre console, front 9
Centre console, rear 10
Seat, rear 11
Roof console 12

Opening and Locking 13

Brief overview –
opening and locking from outside..... 14
Opening and locking from outside 15
Opening and locking from inside 24
Opening and closing the engine
compartment lid 26
Malfunctions when opening and closing 27
Notes on the key and central locking system . 29

Seats, Mirrors and Steering Wheel 31

Front seats..... 32
Front seats with memory..... 33
Easy Entry function 35
Headrests 36
Seat heating at front and rear 37
Seat belts 39
Child restraint system 42
Brief overview – door mirrors..... 48
Door mirrors 49
Interior mirror..... 51
Automatic anti-dazzle interior mirror 51
Steering wheel..... 52
Steering wheel heating 52
Steering wheel adjustment..... 53
Multi-functional steering wheel..... 54
Sun visors 57
Make-up mirror 57
Sun blinds, rear side windows..... 57

Air Conditioning, Parking Heater and Heated Rear Window..... 58

Overview of air-conditioning systems 59
Opening the cover flap 60
Brief overview –
Manually controlled air-conditioning system..... 61
Manually controlled air-conditioning system..... 62
Brief overview – Automatically controlled
2-zone air-conditioning system 66
Automatically controlled 2-zone air-
conditioning..... 67
Brief overview – Automatically controlled
4-zone air-conditioning system,
front control panel 72
Brief overview – Automatically controlled
4-zone air-conditioning system,
rear control panel 73
Automatically controlled 4-zone air
conditioning..... 74
Vents 80
Heated rear window 81
Parking heater 82

Windows and Sliding Roofs 87

Power windows..... 88
Brief overview – sliding/lifting roof 92
Sliding/lifting roof 93
Brief overview –
Panorama roof system 97
Panorama roof system 98
Emergency operation
of the Panorama roof system 102

Lights, Direction Indicators and Windscreen Wipers..... 104

Light switch..... 105
Instrument illumination..... 107
Manual headlight beam adjustment..... 107
Automatic headlight beam adjustment 107
Direction indicator/high beam/
headlight flasher stalk 108
Hazard warning lights..... 108
Interior lighting..... 109
Comfort lighting..... 111
Coming Home function (off delay)..... 111
Door-surrounding lighting..... 112
Emergency-call button..... 112
Brief overview – windscreen wipers..... 113
Windscreen wiper/washer stalk..... 114

Multi-Purpose Display and Instruments.....117

Instrument panel.....118
Oil temperature gauge 120
Tachometer.....120
Clock.....120
Cooling system.....121
Fuel gauge 122
Intelligent Maintenance Computer for the Cayenne (V6) 122
Odometer 123
Speedometer 123
Voltmeter 124
Emission control.....125
Operating the multi-purpose display on the instrument panel.....126
Displaying/resetting average speed 129
Displaying range on remaining fuel.....129
Displaying tyre pressure.....129
Displaying compass 129
Displaying navigation information 129
Opening the main menu.....129
Operating the telephone via the multi-purpose display 130
Setting speed limit on the multi-purpose display 132
Displaying warning messages.....133
Displaying status of level control.....134
Displaying status of locks/reduction.....134
Displaying average consumption.....135
Setting Tyre Pressure Monitoring 135
Switching off passenger compartment monitoring and inclination sensor on the multi-purpose display 144
Synchronous adjustment of door mirrors 145
Changing settings for opening and locking the vehicle.....145
Setting lighting off delay 147
Setting the clock.....148
Setting compass.....149
Changing language for displays.....150
Changing units for displays 150
Resetting display to factory settings.....150
Overview of warning messages.....151
Mobile phones and 2-way radios.....160
Porsche Communication Management (PCM).....160
Radio 161
Fire extinguisher 161

Driving and Driving Safety 162

Before driving off 163
Tips for running in 163
Ignition lock/steering lock.....164
Starting and stopping the engine..... 167
Parking brake 169
Footbrake 169
Brief overview – cruise control.....171
Cruise control.....172
Manual transmission, clutch 175
Tiptronic S 176
Selector lever positions 177
Driving programmes for on-road and off-road driving 184
Power-transmission and running-gear control systems.....190
Air suspension with level control and height adjustment.....202
Porsche Active Suspension Management (PASM).....206
Porsche Dynamic Chassis Control (PDCC).....207
Off-road driving 208
Driving systems for off-road driving 209
Uphill driving 211
Airbag systems.....217

Luggage Compartment, Loadspace and Storage.....219

Folding rear seats forward and returning to upright position.....220
Loadspace 223
Cargo management system 224
Stowing load.....227
Luggage compartment cover 228
Luggage safety net 229
Ski bag 231
Roof Transport System.....233
Storage.....234
Cupholder.....238
DVD player under the right front seat.....239
Ashtray, front 240
Cigarette lighter.....241

Trailer Hitch 242

Trailer coupling 243
Trailer coupling with removable ball hitch 245
Electrically folding trailer coupling 251

Parking 253

ParkAssist.....254
Swivelling down mirror glass
as parking aid.....258
Garage door opener.....259

Alarm System and Theft Protection .. 262

Alarm system 263
Immobiliser 265
Steering column lock 265
Theft protection.....265

Maintenance and Car Care..... 266

Notes on maintenance 267
Checking the engine oil level 268
Topping up engine oil..... 269
Checking the coolant level
and adding coolant 271
Checking brake fluid level
and changing brake fluid 273
Adding washer fluid..... 274
Changing air cleaner 275
Changing particle filter 275
Power steering 275
Wiper blades 276
Emission control system 279
Fuel can.....279
Filling with fuel.....280
Car care instructions.....282

Minor repairs 289

Notes on minor repairs.....290
Tyres and wheels.....292
Jack 298
Tool kit.....298
Compressor 299
Spacers 299
Wheel bolts 300
Flat tyre 301
Inflating tyres on vehicles
without level control 313
Inflating tyres on vehicles with level control ...315
Electrical system 321
Battery.....332
Replacing the remote control battery.....335
External power supply, jump lead starting 336
Replacing bulbs 339
Headlights.....339
Tail light 349
Number plate lights 352
Headlight adjustment.....353
Changing headlights from left
to right-hand traffic.....353
Bulb chart 355
Towing and tow-starting.....356

Tyre Pressure and Technical Data 360

Vehicle identification..... 361
Engine data 363
Transmission 364
Fuel consumption 364
Tyres, rims, tracks 365
Tyre pressures, cold 367
Weights 369
Ground clearance..... 370
Capacities 372
Dimensions..... 373
Driving performance..... 374

Index 376

Overview Illustrations

Driver's cockpit 7
Steering wheel and instrument cluster 8
Centre console, front 9
Centre console, rear 10
Seat, rear 11
Roof console 12

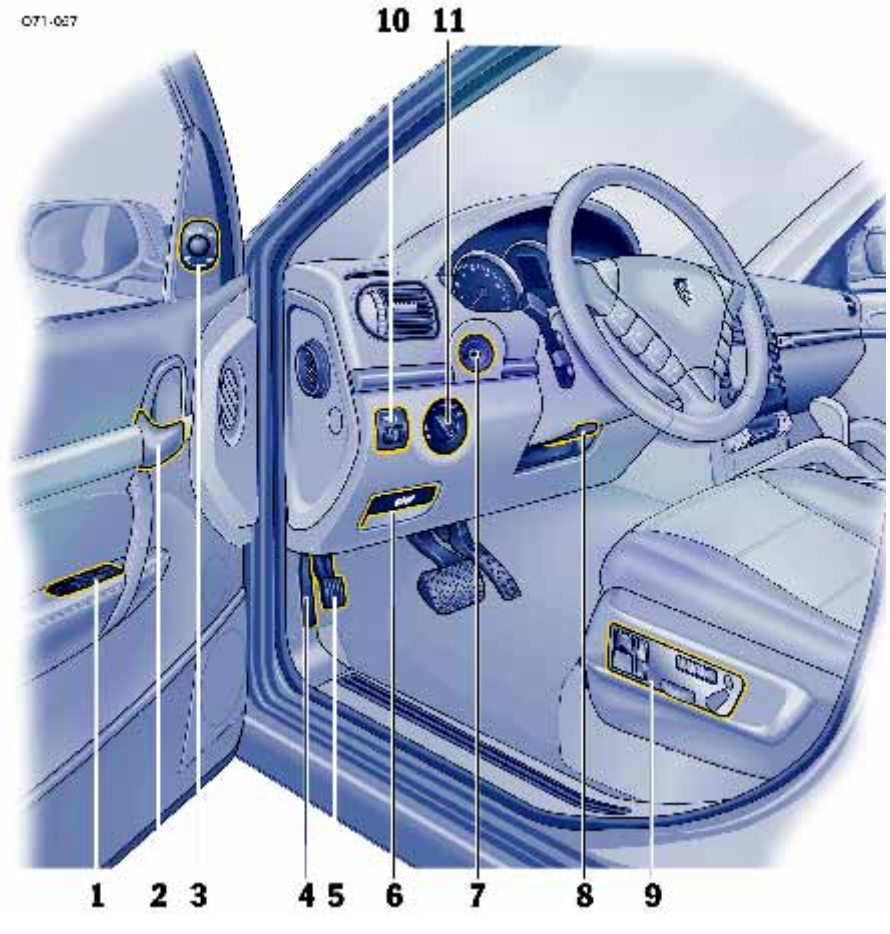

Driver's cockpit

1. Power windows
   See Page 88.
2. Inner door handle
   See Page 25.
3. Door mirror adjustment
   See Page 49.
4. Engine compartment lid release
   See Page 26.
5. Parking brake
   See Page 169.
6. Parking brake release
   See Page 169.
7. Ignition lock/steering lock
   See Page 164.
8. Steering wheel adjustment (manual)
   See Page 53.
9. Seat adjustment
   See Page 32.
10. Dimming of instrument illumination
    See Page 107.
11. Light switch
    See Page 105.

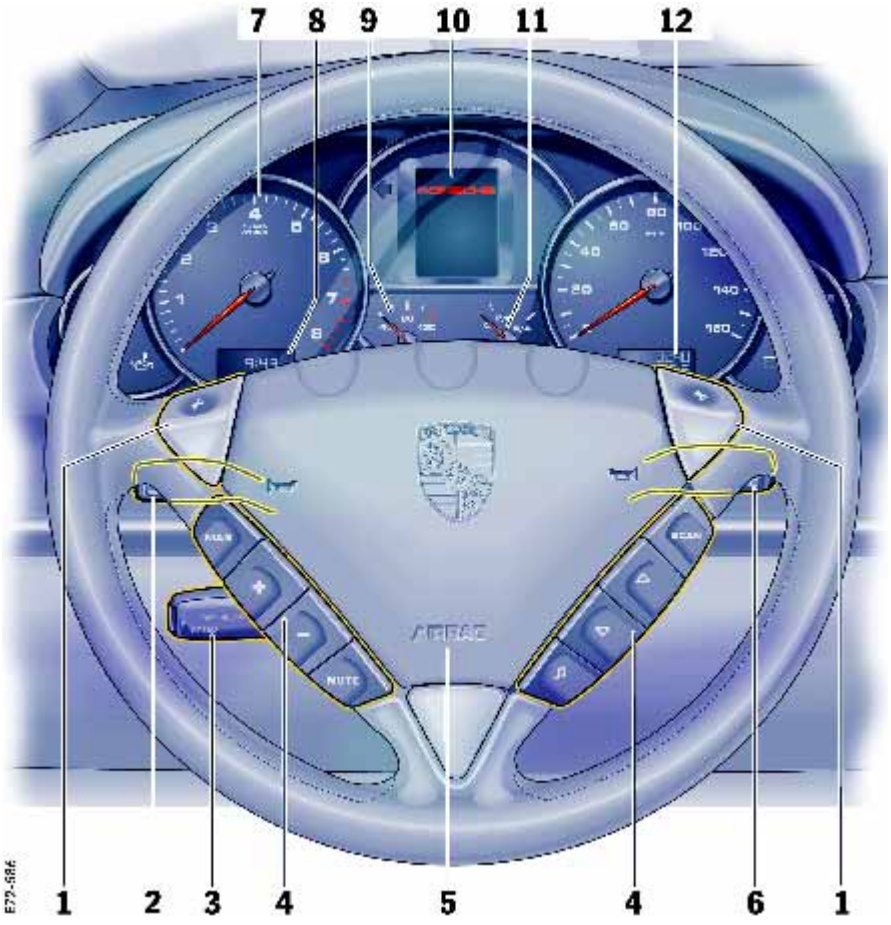

Steering wheel and instrument cluster

1. Tiptronic rocker switches
   See Page 52.
2. Direction indicator
   See Page 108.
3. Cruise control
   See Page 171.
4. Function keys
   See Page 54.
5. Horn
   See Page 52.
6. Windscreen wipers
   See Page 113.
7. Tachometer
   See Page 120.
8. Clock
   See Page 120.
9. Cooling system temperature gauge
   See Page 121.
10. Multi-purpose display
    See Page 126.
11. Fuel gauge
    See Page 122.
12. Odometer
    See Page 123.

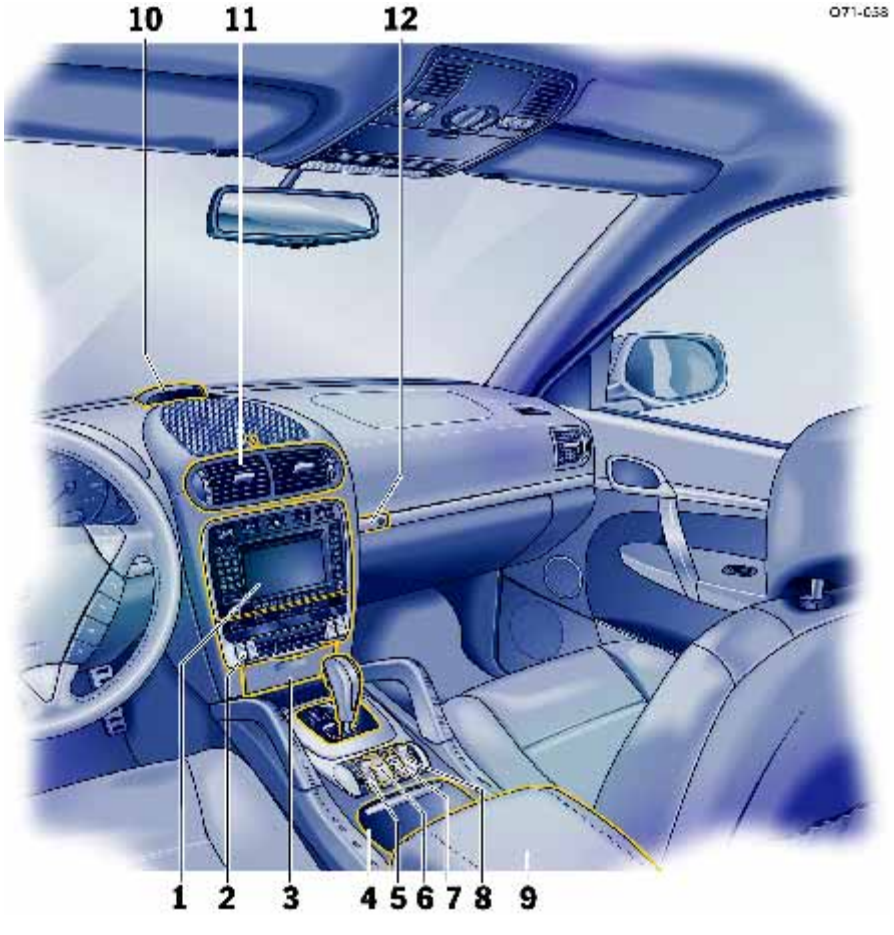

Centre console, front

1. Porsche Communication Management (PCM)
   See separate operating instructions.
2. Air conditioner
   See Page 59.
3. Ashtray/cigarette lighter
   See Page 240.
4. Cupholder
   See Page 238.
5. Reduction (Low Range), differential locks
   See Page 184.
6. Sport mode
   See Page 188.
7. Porsche Active Suspension Management (PASM) - running-gear setup
   See Page 206.
8. Height adjustment, air suspension
   See Page 202.
9. Armrest, oddments trays
   See Page 236.
10. ParkAssist warning indicator
    See Page 256.
11. Vents
    See Page 80.
12. Glove compartment
    See Page 235.

Centre console, rear

1. Cigarette lighter
   See Page 240.
2. Cupholder
   See Page 239.
3. Control panel for 4-zone air conditioning
   See Page 75.
4. Vents
   See Page 80.

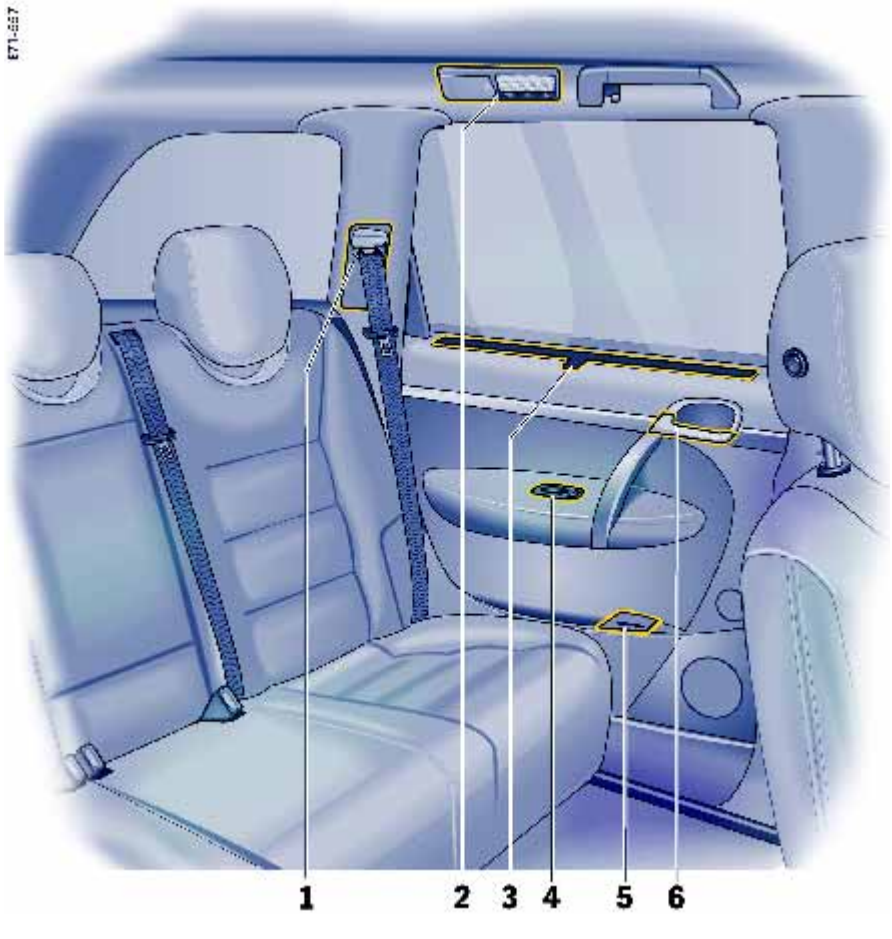

Seat, rear

1. Seat belt height adjustment
   See Page 41.
2. Reading lights
   See Page 110.
3. Sunblind
   See Page 57.
4. Power windows
   See Page 89.
5. Ashtray
   See Page 240.
6. Inner door handle
   See Page 25.

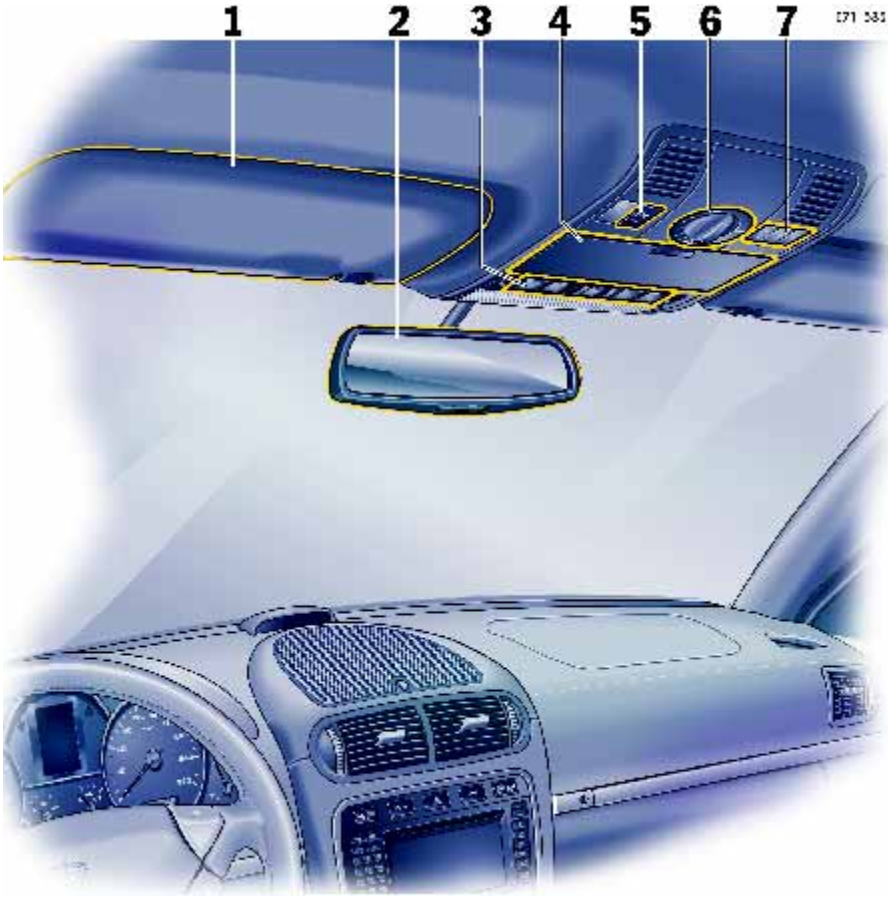

Roof console

1. Sun visor
   See Page 57.
2. Automatic anti-dazzle interior mirror
   See Page 51.
3. Light switch, interior lighting
   See Page 109.
4. Glasses case
   See Page 234.
5. ParkAssist
   See Page 254.
6. Control switch for sliding/lifting roof
   See Page 92.
   or
   Control switch for Panorama roof system
   See Page 97.
7. Garage door opener
   See Page 259.

Opening and Locking

Brief overview –

opening and locking from outside.....14
Opening and locking from outside 15
Opening and locking from inside.....24
Opening and closing the engine
compartment lid 26
Malfunctions when opening and closing 27
Notes on the key and central locking system .29

Brief overview – opening and locking from outside

The Porsche Entry & Drive option can be recognised by the buttons **A** in the door handles.

This brief overview does not replace the information provided in the chapter “Opening and locking from outside”. In particular, warnings are not replaced by this brief overview.

Key

Porsche Entry & Drive

What do I want to do?	What do I have to do?	What happens?
Unlocking	Using the key: Press button on the key. With Porsche Entry & Drive: Grip door handle fully.	Using the key: The hazard warning lights flash once. The doors can be opened. With Porsche Entry & Drive: The doors can be opened.
Locking	Using the key: Press button on the key. With Porsche Entry & Drive: Press the button **A** in the handle.	The hazard warning lights flash twice. The doors are locked.
Locking if persons/animals are remaining in vehicle (switching off passenger compartment monitoring of the alarm system)	Using the key: Press button on the key twice (within 2 seconds). With Porsche Entry & Drive: Press the button **A** in the handle twice (within 2 seconds).	The hazard warning lights flash four times. The doors are locked, but can be opened from inside by pulling the inner door handle twice.
Switching off alarm	Press button on the key.	

Opening and locking from outside

Depending on your vehicle equipment, you can either unlock and lock the vehicle with the vehicle key or without a key by means of Porsche Entry & Drive.

With the key

Use the buttons on the key to unlock and lock the vehicle.

With Porsche Entry & Drive

On vehicles with Porsche Entry & Drive, you can unlock, lock and start the vehicle without using the key.
You simply have to carry the key with you, e.g. in your trouser pocket.

▷ Do not expose the vehicle key to a high level of electromagnetic radiation. This could adversely affect Porsche Entry & Drive.

Note on operation

The factory settings of the vehicle are described in this chapter.
You can change the settings and store them on the respective key on the multi-purpose display of the instrument panel.

▷ For further information on the possible settings on the multi-purpose display:
Please observe the chapter “CHANGING SETTINGS FOR OPENING AND LOCKING THE VEHICLE” on Page 145.

Unlocking and opening doors

Unlocking with the key

1. Briefly press button on the key. The hazard warning lights flash once. The doors are now unlocked.
2. Pull the door handle.

Unlocking with Porsche Entry & Drive (keyless)

The vehicle can be unlocked if you are in the area of the driver's door with the key.

▷ Grip door handle fully. The doors are now unlocked.

▷ Pull the door handle.

Note on operation

The vehicle doors are locked automatically after 30 seconds if they are not opened.

If the passenger compartment monitoring system and inclination sensor have been switched off (restricted theft protection), this also remains the case after automatic relocking.
As a result, the doors can be opened from inside by pulling the inner door handle twice.

When locked again, the passenger compartment monitoring system and inclination sensor are activated once more.

Locking doors

Locking with the key

▷ Close the door.

▷ Briefly press button 🔒 on the key once.
The hazard warning lights flash twice. The doors cannot be opened, either from outside or from inside.
OR
If persons or animals are remaining in the vehicle, briefly press button 🔒 twice.
The hazard warning lights flash four times. The doors can be opened from inside by pulling the inner door handle twice.

▷ Inform any persons remaining in the vehicle that the alarm system will be triggered if the door is opened.

Note on operation for locking the doors with the key

The vehicle cannot be locked if the driver's door is not completely closed.

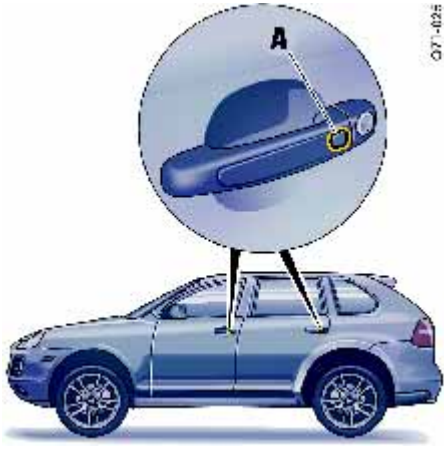

Locking with Porsche Entry & Drive (keyless)

You must carry the key with you.

▷ Close the door.

▷ Briefly press the Porsche Entry & Drive locking button **A** in the door handle.
The hazard warning lights flash twice. The doors cannot be opened, either from outside or from inside.
OR
If persons or animals are remaining in the vehicle, briefly press the Porsche Entry & Drive locking button **A** in the door handle twice.
The hazard warning lights flash four times.
The doors can be opened from inside by pulling the inner door handle twice.

▷ Inform any persons remaining in the vehicle that the alarm system will be triggered if the door is opened.

Note on operation for locking with Porsche Entry & Drive (keyless)

– The vehicle cannot be locked if the driver's door is not completely closed.

– The key must be outside of the vehicle when locking the vehicle doors, otherwise the vehicle doors cannot be locked.

– If the vehicle key with remote control is out of range, the vehicle doors can no longer be opened after they are locked.

Unlocking and opening rear lid

On vehicles with spare wheel bracket, this must be swung to the side before opening the rear lid.

For further information on opening the spare wheel bracket:
Please observe the chapter “OPENING SPARE WHEEL BRACKET” on Page 318.

The vehicle doors remain locked after unlocking the rear lid.

The rear lid is locked automatically after 30 seconds if it is not opened.

Unlocking with the key

▷ Press button on the key.

▷ Press the release handle **(arrow)** on the rear lid and open the rear lid.

Unlocking with Porsche Entry & Drive (keyless)

Warning!

Risk of being locked out of vehicles with Porsche Entry & Drive.

▷ Do not leave the key in the vehicle if the vehicle is locked and access is gained through the rear lid. The vehicle is automatically locked when the rear lid is closed.

If the key has been left in the vehicle, the hazard warning lights flash twice **and** a warning signal sounds. The rear lid can be opened again within approx. 30 seconds. After 30 seconds have elapsed, the vehicle can be unlocked again only with the second key.

Danger!

Risk of poisoning! Exhaust gases can enter the passenger compartment when the rear lid is open.

▷ Always keep the rear lid closed when the engine is running.

▷ Always keep the rear lid closed while driving.

The rear lid is unlocked if you are in the rear area of the vehicle with the key.

▷ Press the release handle **(arrow)** on the rear lid and open the rear lid.

Locking the rear lid

The rear lid has a power closing mechanism.

1. Pull down the rear lid by means of the closing handle (**arrow**), and press it gently into the lock.
   The rear lid is automatically pulled closed and locked (only if rear lid is unlocked).
2. Lock the vehicle.

Warning!

Danger of crushing. The rear lid is automatically pulled closed and locked.

- ▷ Make sure that your fingers are not under the rear lid.
- ▷ Keep foreign objects or limbs away from moving parts (latch striker) of the power closing mechanism.
- ▷ Do not leave children in the vehicle unattended.

Note on operation

On vehicles with Porsche Entry & Drive, the rear lid, rear window and spare wheel bracket can no longer be opened when the vehicle key with remote control is out of range.

Automatic rear lid

Opening and closing rear lid automatically

Warning!

Danger of injury and damage if the rear lid is automatically opened or closed in an uncontrolled way!

- ▷ Open or close the rear lid only when the vehicle is stationary.
- ▷ Never drive with the rear window or rear lid open.
  Exhaust gases can enter the passenger compartment.
- ▷ Open or close the rear lid only when there are no persons, animals or objects within its movement range.
- ▷ Always observe the opening and closing operation so that movement can be stopped at any time in the event of danger.
- ▷ Make sure that there is sufficient clearance behind or above the vehicle (e.g. roof transport systems, garage ceiling).
- ▷ Remove rear rack systems before opening the rear lid automatically.

Risk of being locked out of vehicles with Porsche Entry & Drive.

▷ Do not leave the key in the vehicle if the vehicle is locked and access is gained through the rear window. The vehicle is automatically locked when the rear lid is closed.

If the key has been left in the vehicle, the hazard warning lights flash twice **and** a warning signal sounds. The rear lid can be opened again within approx. 30 seconds. After 30 seconds have elapsed, the vehicle can be unlocked again only with the second key.

Opening the rear lid automatically

The rear lid can be opened only with the release button on the rear lid when the vehicle is operated with a trailer.

There are **three** ways of opening the rear lid:

Option 1

▷ Briefly press the release handle on the rear lid. The vehicle must be unlocked for this.
The vehicle need not be unlocked on vehicles with Porsche Entry & Drive. You simply have to carry the vehicle key with you, e.g. in your trouser pocket.

Option 2

▷ Press the button on the key for approx. 1 second.
If the vehicle is locked, the vehicle doors remain locked when the rear lid is opened.

Option 3

▷ Pull and hold the button in the driver's door with the ignition switched on until the rear lid has opened fully.
Opening is interrupted if the button is released prematurely.

Automatically closing the rear lid

Make sure that the load is not in the area of the rear lid when the lid is closed, otherwise the closing operation will be interrupted after contact with the load, and the rear lid will open again by a few centimetres.

▷ Briefly press the button in the rear lid trim panel.

Interrupting the opening or closing operation in the event of danger

The opening or closing operation is interrupted immediately if one of the following buttons is pressed:

▷ Press the button on the key
or
Release the button in the driver's door
or
Briefly press the button in the rear lid trim panel
or
Briefly press the release button on the rear lid.

Automatic operation can be continued again at any time. To do this, press the corresponding button.

Detection of obstacles during opening

The rear lid will stop moving if opening is blocked by an obstacle. A warning signal then sounds. When the obstacle has been removed, the rear lid can be opened by pressing

the button on the key
or
the button in the driver's door
or
the release button on the rear lid.

Detection of obstacles during closing

The closing operation is interrupted if closing of the rear lid is blocked by an obstacle.
A warning signal sounds and the rear lid opens again by a few centimetres.
When the obstacle has been removed, the rear lid can be closed by pressing the button in the rear lid trim panel.

Adjusting the opening height of the rear lid

The opening height of the rear lid can be individually adjusted so that the rear lid does not collide with the garage ceiling, for example.
On vehicles with level control, the vehicle height changes depending on the setting of the level control system. For this reason, always adjust the opening height with the vehicle at the highest level setting so that the rear lid cannot accidentally collide with the garage ceiling, for example.

1. Stand behind the vehicle and open the rear lid.
2. Press the button on the key to stop the automatic opening operation at around 2/3 of the opening height.
3. Now move the rear lid up by hand until the desired opening height is reached. Make sure that there is a sufficient minimum clearance from any obstacle.
4. Press and hold the button in the rear lid trim panel for
   approx. 3 seconds.
   An acknowledgement signal sounds, and the direction indicators light up once.
   The opening height of the rear lid has now been programmed.
   The rear lid can now be closed by briefly pressing the button.

This setting cannot be deleted. If a different setting is required, repeat steps 1 to 4.

Malfunctions of the rear lid drive

The automatic function is not active if the battery voltage is too low.
If a button is pressed, the rear lid lock is unlocked and a warning signal sounds for 3 seconds. The rear lid can now be opened by hand.

▷ Charge the vehicle battery.

Emergency operation of the rear lid

A warning signal sounds for approx. 3 seconds if the automatic opening or closing operation is interrupted by a fault.

▷ Open or close the rear lid by hand.

Unlocking and opening rear window

The vehicle doors remain locked after unlocking the rear lid.

The rear window is locked automatically after 30 seconds if it is not opened.

Unlocking with the key
(only on vehicles without automatic rear lid)

▷ Press button on the key for approx. 2 seconds.
The rear window pops open.

Unlocking with the key

1. Press button on the key.
2. Press the release button **A** and open the window.

Unlocking with Porsche Entry & Drive (keyless)

Warning!

Risk of being locked out of vehicles with Porsche Entry & Drive.

▷ Do not leave the key in the vehicle if the vehicle is locked and access is gained through the rear window. The vehicle is automatically locked when the rear window is closed.
If the key has been left in the vehicle, the hazard warning lights flash twice **and** a warning signal sounds. The rear window can be opened again within approx. 30 seconds. After 30 seconds have elapsed, the vehicle can be unlocked again only with the second key.

Danger!

Risk of poisoning! Exhaust gases can enter the passenger compartment when the rear window is open.

▷ Always keep the rear window closed when the engine is running.

▷ Always keep the rear window closed while driving.

The rear window is unlocked if you are in the rear area of the vehicle with the key.

▷ Press the release button **A** and open the window.

Closing the rear window

▷ Close the rear window and press it into the lock until it can be felt to engage.

Note on operation

On vehicles with Porsche Entry & Drive, the rear lid, rear window and spare wheel bracket can no longer be opened when the vehicle key with remote control is out of range.

Opening and locking from inside

The factory settings of the vehicle are described in this chapter.
You can change the settings and store them on the respective key on the multi-purpose display of the instrument panel.

▷ For further information on the possible settings (e.g. Auto Lock and Auto Unlock) on the multi-purpose display:
Please observe the chapter “CHANGING SETTINGS FOR OPENING AND LOCKING THE VEHICLE” on Page 145.

Locking doors

Button in the armrest

▷ Press the right half of the button in the door panel.
All vehicle doors will be locked.
The doors can be opened by pulling the inner door handle twice.

Automatic with Auto Lock

The vehicle is locked automatically when a speed of 6 km/h (4 mph) is exceeded.

Unlocking doors

Button in the armrest

▷ Press the left half of the button in the door panel.
If pressed on the rear doors, **only** the relevant door will be unlocked.

Automatic with Auto Unlock

The vehicle is automatically unlocked when the ignition key is withdrawn or the ignition is switched off.

Note on operation

If the vehicle was locked by remote control or with the key, it cannot be unlocked with the central locking button.

Opening doors

Opening unlocked doors

▷ Pull inner door handle once.

Opening locked doors

(Not if the vehicle was locked by pressing the button once. The doors cannot be opened in this case.)

▷ Pull inner door handle twice.

Securing rear doors

You can secure the rear doors to prevent unintentional opening when driving.

Switching child lock on and off

The child locks are fitted in the lock area of the rear doors.
The doors cannot be opened from inside when the child locks are engaged.

▷ To engage: Turn child lock to position **A** .

▷ To disengage: Turn child lock to position **B**.

Switching child protection on/off

The power windows, central locking buttons on the rear doors and the rear control panel for the air conditioning can be disabled by means of the safety button in the armrest of the driver's door.

▷ Press the safety button to switch child protection on and off.
The symbol in the safety button lights up if child protection is active.

Opening and closing the engine compartment lid

Opening

Caution!

Risk of damage to engine compartment lid or windscreen wipers.

- Make sure that the windscreen wipers are not pulled out forwards when opening the engine compartment lid.
- Always switch off windscreen wipers before opening the engine compartment lid (wiper switch in position **0**).
  If the wiper arms are not in their final position, they will automatically move to this position when the engine compartment lid is opened, even if the ignition is switched off. The wiper arms remain in this position until the lid is closed and the wiper system is switched off and then on again.

1. Pull the release lever **(arrow)**.
   The engine compartment lid is now unlocked.

2. Unlatch safety catch **A**.
3. Open the lid completely.

Closing

1. Lower lid and let it fall into the lock. If necessary, push the lid closed with the palm of your hand in the area of the lock.
2. Check that the lid has correctly engaged in the lock.

When the vehicle is in motion, a message will be displayed on the multi-purpose display of the instrument panel if the lid is not closed properly.

Malfunctions when opening and closing

Emergency operation of rear lid

If the rear lid cannot be opened with the radio remote control (e.g. if the battery of the remote control is dead), the emergency operation must be performed:

1. Unlock and open the driver's door with the vehicle key.
2. Switch on the ignition so that the alarm system will not be triggered.
3. Check if the TAILGATE function is activated in the multi-purpose display of the instrument panel.
   Please observe the chapter “SETTING REAR LID LOCKING” on Page 146.
4. Press the central locking button in the armrest. The rear lid is now unlocked and can be opened with the unlocking handle.

Only one door is unlocked

The setting for locking and unlocking the doors and rear lid has been changed on the multi-purpose display of the instrument panel. You can open all doors irrespective of the setting made.

▷ Press button on the key twice within 2 seconds.

The vehicle cannot be unlocked

The remote control of the key may

– not function correctly due to radio waves (also radio contact between remote control and vehicle in the case of Porsche Entry & Drive),

– fail due to a fault,

– fail due to an exhausted battery.

▷ Unlock the vehicle with the unfolded key in the key lock.

▷ If you unlock the vehicle with the key at the door lock, only the driver’s door can be opened.
In order to prevent the alarm system from being triggered, you must switch the ignition on within 15 seconds of opening the door.

The vehicle cannot be locked

This is recognisable by the fact that the hazard warning lights do not flash and there is no locking noise.

The remote control of the key may

– not function correctly due to radio waves (also radio contact between remote control and vehicle in the case of Porsche Entry & Drive),

– fail due to a fault,

– fail due to an exhausted battery.

▷ Lock the vehicle with the unfolded key in the key lock.

If there is a defect in the central locking system, operating the lock barrel in the driver's door will lock all functioning locking elements of the central locking system.

▷ For information on locking the doors by means of the emergency operation:
Please observe the chapter “NOT ALL VEHICLE DOORS ARE LOCKED.” on Page 28.

▷ Have faults in the central locking system remedied.
Consult a qualified specialist workshop. We recommend that you use a Porsche partner for this work since these are staffed with trained personnel and have the necessary parts and tools.

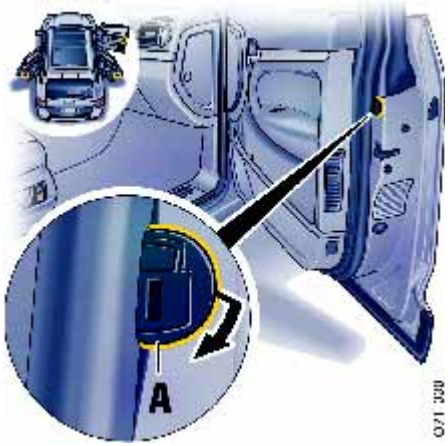

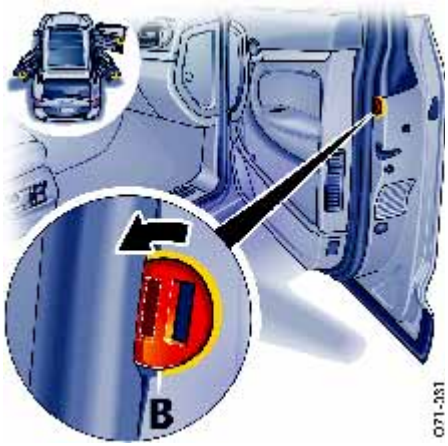

Not all vehicle doors are locked

The central locking system has failed. The doors must be locked with the emergency locking operation.

1. Open the passenger's door.
2. Remove cover **A**.
3. Press red slide **B** with the key bit in the direction of the arrow.
   For information on folding out the key bit: Please observe the chapter "FOLDING OUT THE KEY BIT" on Page 29.
4. Fit cover **A** again.
5. Repeat procedure at the rear doors.
6. Close all doors.
7. Lock the driver's door with the key in the door lock.

Notes on the key and central locking system

Key

Two fold-out vehicle keys are supplied with your vehicle. These keys operate all the locks on your vehicle.

- ▷ Be careful with your vehicle keys: do not part with them except under exceptional circumstances.
- ▷ Remove the ignition key even if leaving the vehicle only briefly.
- ▷ Inform your insurance company of any loss or theft of car keys or if extra or if replacement keys have been made.
- ▷ Third parties can still operate the mechanical locks with a lost key.

Note on operation

The air conditioner settings are stored on the respective key when switching off the ignition and locking the vehicle.

Folding out the key bit

- ▷ Press release button.
  The key bit folds out.

Folding in the key bit

- ▷ Press release button and fold in the key bit.

Replacement keys

Vehicle keys can only be ordered at a Porsche partner. Sometimes, this may take a long time.

You should therefore always have a replacement key available. Keep it in a safe place, but under no circumstances in or on the vehicle.

The key codes of new keys have to be “taught” to the vehicle control unit by your Porsche partner. All keys belonging to the vehicle must also be taught again for this purpose.

Central locking system

Your vehicle is equipped with a central locking system. The following are unlocked or locked together:

- Doors
- Rear lid/rear window
- Filler flap

The central locking system is always activated when the vehicle is unlocked and locked.

On the multi-purpose display of the instrument panel, you can set different variants for locking and unlocking the doors and rear lid. You can open all doors irrespective of the setting made.

▷ Press button on the key twice within 2 seconds.

Switching off readiness for operation (on vehicles Porsche Entry & Drive)

If the vehicle is not unlocked within **3 days**, Porsche Entry & Drive readiness for operation is switched off.

▷ Pull the door handle **once**, to reactivate the system.

▷ Pull the door handle **again**, to open the door.

Seats, Mirrors and Steering Wheel

Front seats 32
Front seats with memory 33
Easy Entry function..... 35
Headrests..... 36
Seat heating at front and rear 37
Seat belts 39
Child restraint system..... 42
Brief overview – door mirrors 48
Door mirrors..... 49
Interior mirror 51
Automatic anti-dazzle interior mirror..... 51
Steering wheel..... 52
Steering wheel heating 52
Steering wheel adjustment..... 53
Multi-functional steering wheel..... 54
Sun visors 57
Make-up mirror 57
Sun blinds, rear side windows 57

Front seats

Seat position

A correct sitting position is important for safe and fatigue-free driving. We recommend the following procedure for adjusting the driver's seat to suit individual requirements:

1. Adjust the seat height to give yourself enough headroom and a good overview of the vehicle.
2. Adjust the seat in fore-and-aft direction until, with the accelerator pedal fully depressed, your leg is straight but your entire foot still rests on the accelerator pedal.
3. Grip the top half of the steering wheel. Set the backrest angle and the steering wheel position so that your arms are almost outstretched. However, your shoulders must still rest on the backrest.
4. If necessary, correct the seat fore-and-aft adjustment.
5. Adjust the height of the headrest so that the upper edge is at eye level or higher.

Adjusting the seat

Warning!

Risk of accident. The seat may move further than desired if you attempt to adjust it whilst driving. You can lose control of the vehicle.

▷ Do not adjust the seat whilst driving.

A Seat height adjustment at front.

B Seat height adjustment at rear.

C Fore and aft adjustment.

D Backrest angle adjustment.

E Lumbar support adjustment.
To permit a relaxed sitting posture, the backrest curvature is continuously adjustable in vertical and horizontal directions for individual pelvis and spinal column support.

▷ Press the switch in the direction indicated by the **arrows** until the desired setting is reached.

Front seats with memory

Personal seat, door mirror, steering wheel and seat belt height adjustments can be stored on the person buttons **A** and vehicle keys and recalled with these.

Warning!

Risk of crushing due to uncontrolled recall of settings.

▷ Cancel automatic adjustment by pressing any of the seat adjustment buttons.

▷ Do not leave children in the vehicle unattended.

Memory options

– Seat adjustment

– Door mirror adjustment

Comfort memory options

– Seat adjustment

– Door mirror adjustment

– Steering wheel and seat belt height adjustment

Recalling the settings using the vehicle key or in vehicles that have Porsche Entry & Drive

▷ Open the driver's door.
The stored settings of the driver's seat are recalled automatically.

Cancelling setting

Automatic settings can be cancelled immediately by pressing any driver's seat adjustment button.

Recalling the settings with person buttons 1 - 3 (driver's and passenger's seat)

1. Unlock the vehicle.
2. Press the relevant person button until the stored positions have been reached
or
Briefly press the person button if the ignition key is inserted or if the ignition is switched on (in vehicles that have Porsche Entry & Drive).
The stored positions for each seat are recalled automatically.

Cancelling setting

Automatic settings can be cancelled immediately by pressing any seat adjustment button.

Storing driver's seat settings

Storing settings on a person button and a vehicle key

1. Apply the parking brake.
2. Switch ignition on.
3. Make the required adjustments to the seat, mirror, steering wheel and seat belt.
4. Briefly press the **SET** memory button and, within 10 seconds, hold down one of the person buttons **1, 2** or **3** until an acknowledge tone is obtained.
   The settings are now stored on the desired person button.
5. Withdraw vehicle key or switch ignition off in vehicles that have Porsche Entry & Drive.
6. Press the **SET** memory button within 10 seconds and keep the button depressed until an acknowledge tone is obtained.
   The settings are now assigned to the vehicle key.

A - *Mirror adjustment*
C - *Passenger mirror adjustment*

Storing passenger mirror setting as a parking aid

If it is wished that the passenger mirror should swivel downwards when reversing, this can also be stored in addition to the driver's seat setting.

1. Apply the parking brake.
2. Switch ignition on.
3. Press the relevant person button.
4. Engage reverse gear.
5. Set the control switch **A** for the mirror setting to the passenger's side **C**.
   The passenger mirror swivels downwards.
6. Adjust the passenger mirror to the required setting.
7. Briefly press the **SET** memory button and, within 10 seconds, hold down the person button on which the setting is to be stored until an acknowledge tone is obtained.

Storing passenger's seat settings

1. Apply the parking brake.
2. Switch ignition on.
3. Adjust seat position and belt height.
4. Briefly press the **SET** memory button and, within 10 seconds, hold down one of the person buttons **1, 2** or **3** until an acknowledge tone is obtained.

Automatic storage of driver's seat settings

If settings were changed after the driver's door was opened, these new settings are temporarily stored when the vehicle is locked.
This stored setting is deleted if the vehicle is unlocked with a programmed key and the driver's door is opened. Then the settings of the key used are recalled.

Easy Entry function

The Easy Entry function makes it easier for you to get in and out of the vehicle.

Warning!

Risk of crushing if persons are behind the driver's seat when settings are recalled. Risk of damage if the rear seat bench is folded forward when settings are recalled.

▷ Switch off the Easy Entry function if there are persons behind the driver's seat or if the rear seat bench is folded forward.

Switching Easy Entry function on and off

▷ Press switch **A**.

Entering the vehicle

When the driver's door is opened, the driver's seat moves to the rear.
Once the driver's door is closed and the ignition key is inserted or, in the case of vehicles that have Porsche Entry & Drive, the ignition is switched on, the seat and steering wheel move into the stored position.

Exiting the vehicle

The steering wheel moves into the frontmost, top position:

– After the ignition key is removed **or**

– After the ignition is switched off and the driver's door is opened on vehicles equipped with Porsche Entry & Drive **or**

– When the steering column is locked.

When the driver's door is opened, the driver's seat moves to the rear.

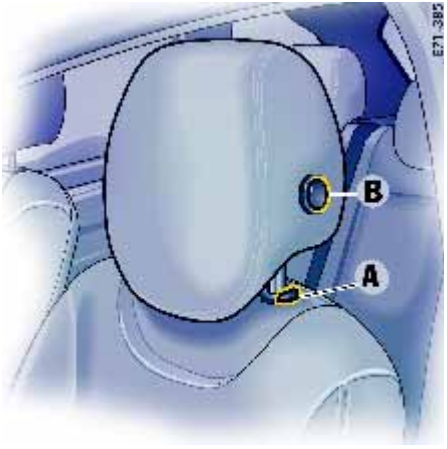

Example: front seat

Headrests

Removing

Front seats

▷ Press button **A** and, at the same time, completely remove headrest.

Rear seats

▷ Press button **B** and push the headrest all the way down.

▷ Press button **A** and, at the same time, completely remove headrest.

Installing

Note

The middle headrest of the rear seat bench must only be fitted to the middle seat of the rear seat backrest.

1. Insert the headrests into the guides.
2. Press button **B** and, at the same time, push the headrest downwards until the desired position is reached.
   Install the middle headrest of the rear seat bench only on the middle seat and push it down fully.

Adjusting

The heights of the headrests for the front seats and the outer headrests for the rear seats can be adjusted.

Raising

▷ Push headrest upwards until the desired position is reached.
Additionally press button **B** on the rear seat headrests.

Lowering

▷ Press button **B** and, at the same time, push the headrest downwards until the desired position is reached.

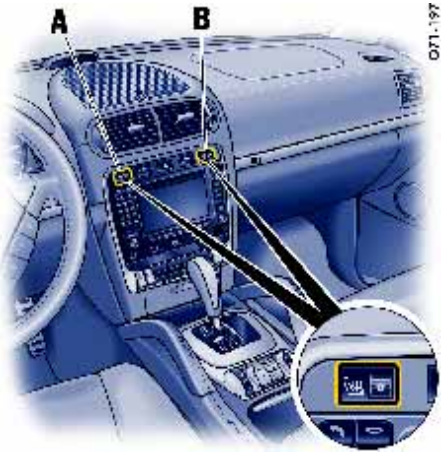

A - *Front seat, left*
B - *Front seat, right*

C - *Rear seat, left*
D - *Rear seat, right*

Seat heating at front and rear

The seat heating is ready for operation when the ignition is on. The heating power can be steplessly adjusted with the thumb wheel.

Switching on

▷ Turn thumb wheel until the desired setting is reached.

Switching off

▷ Turn thumb wheel to position **O**.

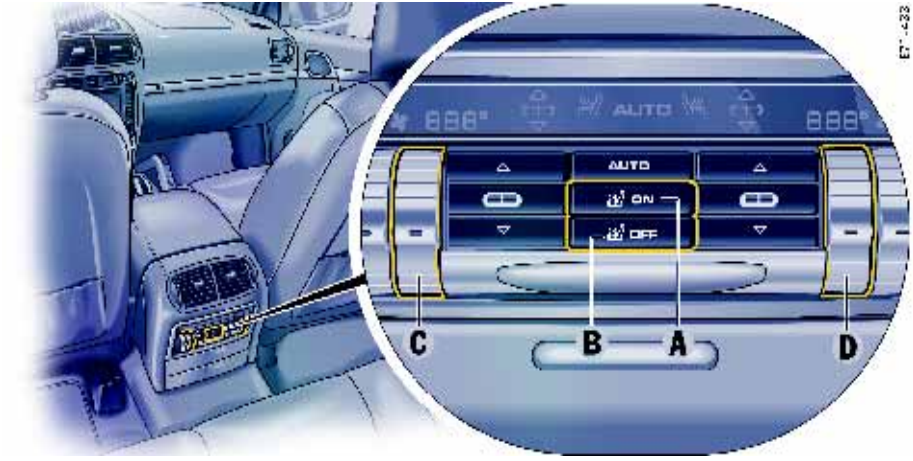

A - *Switches seat heating on*
B - *Switches seat heating off*
C - *Temperature control for left seat*
D - *Temperature control for right seat*

Rear seat heating for vehicles with 4-zone air conditioning

Switching on

▷ Press button **A**.

After the seat heating is switched on, the air conditioning display switches to seat heating mode for approx. 10 seconds.

Controlling the temperature

▷ Press button **C** or button **D** upwards or downwards until the desired temperature is reached.

Switching off

▷ Press button **B**.

Seat belts

The seat belts are not suitable for persons under 150 cm (5 ft.) tall. Suitable restraint devices should therefore be used.

Safety notes!

- ▷ All occupants of the vehicle must wear seat belts for their own safety on every journey. Give your passengers all the information in this chapter.
- ▷ Never use **one** belt for two persons at the same time.
- ▷ Remove any loose, bulky items of clothing that prevent the belt from fitting correctly and restrict your freedom of movement.
- ▷ Do not lay the belt across hard or breakable objects (spectacles, ball-point pens, pipes, etc.).
  Such articles may represent an additional danger of injury.
- ▷ Belt straps must not be twisted or loose.
- ▷ Check all belts regularly for signs of damage in the fabric, and check that the buckle and attachment points function correctly.
- ▷ Belts that are damaged or have been heavily stressed in an accident must be replaced immediately. The same applies to belt tensioner systems which have been triggered. In addition, the anchor points of the belts should be checked.
  Consult a qualified specialist workshop. We recommend that you use a Porsche partner for this work since these are staffed with trained personnel and have the necessary parts and tools.
- ▷ Make sure the belts are fully retracted when they are not being used. This protects them from dirt and damage.

Warning light and warning message

The following functions serve as a reminder to fasten the seat belts; they remain active until the tongue of the driver's seat belt is inserted into the buckle:

- The warning light on the instrument panel lights up when the ignition is switched on.
- A warning appears on the multi-purpose display of the instrument panel,
- A warning signal (gong) sounds for approx. 90 seconds when the speed exceeds 24 km/h (15 mph).

Belt tensioner

Depending on the force of a collision, fastened seat belts are tightened in an accident.

The belt tensioners are triggered in:

- Front and rear impacts
- Side impacts (front belt tensioners)
- Vehicle rollover

Maintenance notes

The belt tensioner system can only be triggered once; the system must be replaced afterward. Work may be carried out on the belt tensioner system only by a qualified specialist workshop. We recommend that you use a Porsche partner for this work since these are staffed with trained personnel and have the necessary parts and tools.
Smoke is released when the belt tensioners are triggered. This does not indicate a fire in the vehicle.

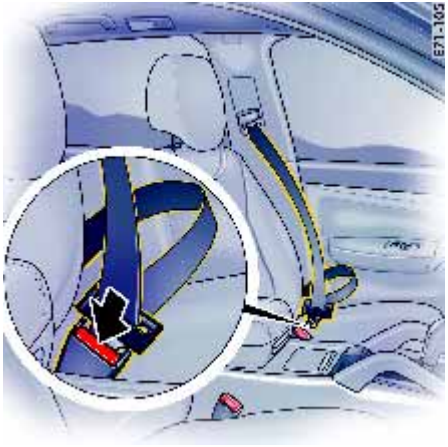

Fastening the seat belt

- Assume a comfortable sitting position. Adjust the backrest of the front seat so that the belt always rests on your upper body and runs across the middle of your shoulder.
- Grasp the belt tongue and pull the belt in a slow, continuous motion across your chest and lap.

Note on operation

The belt can be blocked if the vehicle is standing at an angle or if the belt is pulled out using a jerking movement.

- The belt cannot be pulled out while accelerating and slowing down, when cornering and when driving uphill.
- Insert the belt tongue into the appropriate buckle on the inboard side of the seat, until it locks securely with an audible click.
- Make sure that belts are not trapped or twisted, and that they are not rubbing on sharp edges.
- The horizontal section of the belt should always fit snugly across the pelvis. Therefore, after fastening the belt, always pull the diagonal part of the belt upwards.
  Pregnant women should position the belt as low as possible across the pelvis, and ensure that it is not pressing against the abdomen.
- Pull on the diagonal section of the belt now and again during the journey to ensure that the horizontal section remains tight.

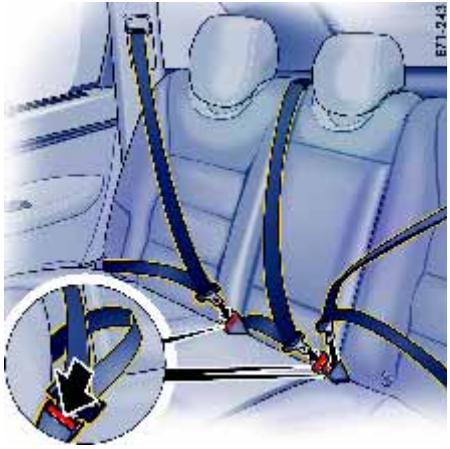

- Pay attention to ensuring the correct assignment of seat belts and buckles on the rear seat bench.

Releasing the seat belt

- Hold the belt tongue.
- Press the red button (**arrow**).
- Guide belt tongue to the reel.

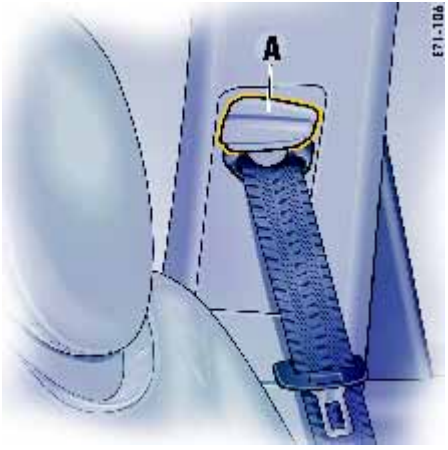

Seat belt height adjustment

The heights of the belt deflectors for the driver's seat, passenger's seat and the outer rear seats can be adjusted.
Adjust the height of the seat belt so that it runs across the middle of the shoulder, not against the neck.

Adjusting belt height manually

- ▷ Upward – push belt deflector up.
- ▷ Downward – press button **A** and move belt deflector.

Adjusting belt height electrically

- ▷ Operate rocker switch **B** in the desired direction until the optimal belt adjustment is reached.

On vehicles with comfort memory, seat belt height adjustment can be stored on the person buttons and vehicle keys and recalled with these.

For further information on storing the belt height setting on the vehicle key:

- ▷ Please observe the chapter "FRONT SEATS WITH MEMORY" on Page 33.

Child restraint system

Danger!

Risk of serious or mortal injury from the passenger airbag.

▷ The passenger airbag must always be switched off if child restraint systems are installed on the passenger's seat.
Switching off will prevent the risk of serious or mortal injury potentially caused by the airbag.

To switch off the passenger airbag:

▷ Please observe the chapter "SWITCHING PASSENGER AIRBAG ON AND OFF" on Page 44.

Children up to 9 months old

Children of this age must be carried in a restraint system which is fitted **facing backwards**.

▷ The passenger airbag must be switched off when these systems are used on the passenger's seat.

Children aged between 9 months up to 3 years

Children of this age are carried in child restraint systems **facing forward**.
Whenever possible, these child restraint systems should be installed on the rear seats.

▷ The passenger airbag must be switched off when these systems are used on the passenger's seat.

Children in ages from 3 to 6 years

Children of this age are carried in child restraint systems **facing forward**.
Whenever possible, these child restraint systems should be installed on the rear seats.

▷ The passenger airbag must be switched off when these systems are used on the passenger's seat.

Children in ages from 6 to 12 years

Children of this age are carried in child restraint systems **facing forward**.
Whenever possible, these child restraint systems should be installed on the rear seats.

▷ The passenger airbag must be switched off when these systems are used on the passenger's seat.
For children weighing 27 kg or more, the passenger airbag should be switched on.
The vehicle seat must be adjusted so that it is in its rear position in this case.

Recommended child restraint systems

Age group	Weight group	Seat type	Authorisation number	Permitted on passenger's seat, outer rear seat, centre rear seat only with seat belt
Up to approx. 9 months	Up to 13 kg	Porsche Baby Seat 0+ ISOFIX Universal Porsche Baby Seat 0+ ISOFIX Special Porsche part No.: 955.044.800.42	E1 3030011 E1 3030012	yes
From 9 months to 3 years	From 9 to 18 kg	JUNIOR SEAT ISOFIX Group I Universal Junior Seat ISOFIX Group I Special Porsche part No.: 955.044.800.44	E1 3030013 E1 3030014	yes
From 3 years to 6 years	From 16 to 25 kg	JUNIOR SEAT ISOFIX Group II Universal Porsche part No.: 955.044.800.44	E1 3030015	yes
From 6 years to 12 years	From 15 to 36 kg	Porsche KID Plus Porsche part No.: 955.044.801.02	E1 03301169	yes

Note

If children weighing up to 27 kg are to be transported in a child restraint system on the passenger's seat, the passenger airbag must be switched off.
If the body weight is more than 27 kg, the passenger airbag should be switched on.
The vehicle seat must be adjusted so that it is in its rear position in this case.

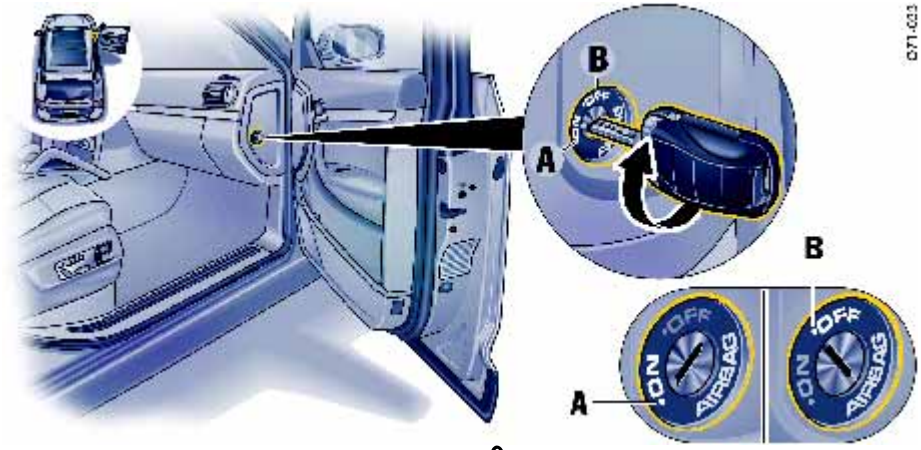

A - *Passenger airbag switched on (ON)*
B - *Passenger airbag switched off (OFF)*

Switching passenger airbag on and off

1. Remove cover
2. Using the vehicle key, switch the passenger airbag off **(B)** or on **(A)**.

Danger!

Risk of serious or mortal injury for the passenger if the passenger airbag remains switched off after the child seat is removed.

▷ The passenger airbag must be switched on again once the child seat has been removed.

Warning light “PASSENGER AIRBAG OFF”

If the airbag is switched off on the passenger’s side, the PASSENGER AIRBAG OFF (**A**) warning light is continuously lit when the ignition is switched on.

Danger!

Risk of serious or mortal injury from the passenger airbag.
If the “PASSENGER AIRBAG OFF” warning light is not lit when the ignition is switched on and the Airbag OFF switch is switched off, this could indicate a fault in the system.

- ▷ Do not fit a child restraint system on the passenger’s seat.
- ▷ Have the fault remedied immediately. Consult a qualified specialist workshop. We recommend that you use a Porsche partner for this work since these are staffed with trained personnel and have the necessary parts and tools.

Further important information concerning the topic “AIRBAG” can be found in a separate chapter:

- ▷ Please observe the chapter “AIRBAG SYSTEMS” on Page 217.

ISOFIX child restraint system

Use only child restraint systems with the ISOFIX system recommended by Porsche. These systems have been tested and adjusted to the interior of your Porsche and the appropriate child age groups. Other systems have not been tested and could entail an increased risk of injury.

You can obtain an ISOFIX child seat system at a Porsche partner.

▷ Always observe the separate installation instructions for your child seat.

Safety notes!

▷ Always observe the separate installation instructions for your child seat.

▷ When using a child restraint system, it is vital that you observe the legal regulations applicable in your country.

▷ Use only child restraint systems recommended by Porsche.
These systems have been tested and adjusted to the interior of your Porsche and the appropriate child age groups.
Other systems have not been tested and could entail an increased risk of injury.

▷ As a rule, child restraint systems should be installed on the rear seats.

▷ Seek appropriate advice from your Porsche partner about the possible installation of a Porsche child restraint system.

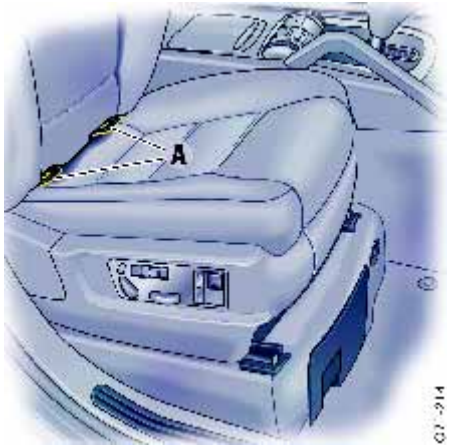

Installing a child seat with ISOFIX system

Markings for the Isofix child seat anchorage can be found on the right and left on the backrest of the passenger seat and on the backrests of the outer rear seats.

The retaining lugs **A** for the Isofix child seat anchorage can be found directly under the markings between backrest and seat cushion.

1. Secure the child seat to retaining lugs **A** as outlined in the instruction manual for the child seat.
2. Pull the child seat to check that both fastening points are engaged correctly.

Danger!

Risk of serious or mortal injury for the passenger if the passenger airbag remains switched off after the child seat is removed.

▷ The passenger airbag must always be switched off if child restraint systems are installed on the passenger's seat for children weighing up to 27 kg.
For children weighing 27 kg or more, the passenger airbag should be switched on.
The vehicle seat must be adjusted so that it is in its rear position in this case.

To switch on the passenger airbag:

▷ Please observe the chapter "SWITCHING PASSENGER AIRBAG ON AND OFF" on Page 44.

Brief overview – door mirrors

This brief overview does not replace the information provided in the chapter “Door mirrors”. In particular, warnings are not replaced by this brief overview.

Precondition

▷ Switch ignition on.

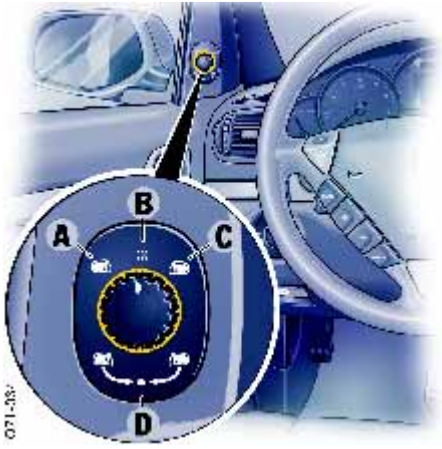

Switch for mirror adjustment

What do I want to do?	What do I have to do?	What do I see?
Adjusting the mirror on the driver’s side	Turn switch to position **A** and tilt switch in the desired direction.	The mirror glass moves in the desired direction.
Adjusting the mirror on the passenger’s side	Turn switch to position **C** and tilt switch in the desired direction.	The mirror glass moves in the desired direction.
Folding in mirrors	Turn switch to position **D**.	Both door mirrors fold in.
Unfolding mirrors	Turn switch to position **A** or **C**.	Both door mirrors unfold.
Heating mirrors	Turn switch to position **B**.	

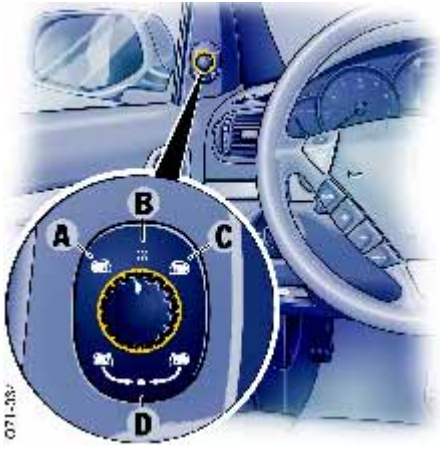

A - *Door mirror adjustment – driver's side*
B - *Door mirror heating*
C - *Door mirror adjustment – passenger's side*
D - *Folding in door mirrors*

Door mirrors

The convex mirror on the passenger's side and the aspherical mirror on the driver's side provide a larger field of view.

Warning!

Risk of accident. Vehicles or objects appear smaller in convex mirrors and further away than they are in reality.

▷ Bear this distortion in mind when estimating the distance of vehicles behind you and when reversing into a parking space.

▷ Also make use of the interior mirror for judging distance.

Risk of damage to the door mirrors when washing the vehicle in a car wash.

▷ Fold in door mirrors before using the car wash.

Adjusting door mirrors

1. Switch ignition on.
2. Select **A** for the driver's side or **C** for the passenger's side by turning the control switch.
3. Move the door mirror glasses in the appropriate direction by tilting the control switch.

If the electrical adjustment facility fails

▷ Adjust the mirror by pressing on the mirror face.

Adjusting the door mirrors synchronously

In the multi-purpose display of the instrument panel, you have the option of activating synchronous adjustment of the door mirrors.

▷ Please observe the chapter "SYNCHRONOUS ADJUSTMENT OF DOOR MIRRORS" on Page 145.

Folding in door mirrors

▷ Switch ignition on.

▷ Turn control switch to position **D**.
Both door mirrors fold in automatically.

If the electrical adjustment facility fails

▷ Fold in mirrors manually.

Unfolding door mirrors

▷ Switch ignition on.

▷ Turn control switch to position **A** or **C**.
Both door mirrors unfold automatically.

If the electrical adjustment facility fails

▷ Unfold mirrors manually.

Door mirror heating

The door mirror heating is ready for operation when the ignition is switched on.

Switching on

▷ Turn control switch to position **B**.
Both door mirrors are heated.

Switching off

▷ Change the control switch position.

Storing door mirror settings

On vehicles with seat memory, individual door mirror settings can be stored on the person buttons of the seat memory and on the vehicle keys and recalled with these.

For further information on calling up and storing the seat and door mirror settings on vehicles with seat memory:

▷ Please observe the chapter “FRONT SEATS WITH MEMORY” on Page 33.

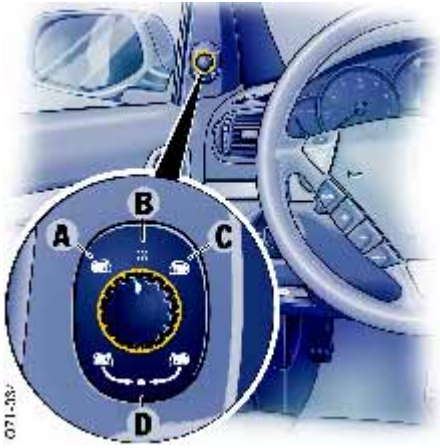

A - *Door mirror adjustment – driver’s side*
B - *Door mirror heating*
C - *Door mirror adjustment – passenger’s side*
D - *Folding in door mirrors*

Swivelling down mirror glass as parking aid

When reverse gear is engaged, the mirror on the **passenger's side** swivels down slightly to show the kerb area.

Preconditions

– Vehicle must be equipped with seat memory.
– Control switch **A** must be turned to position **C** (passenger mirror adjustment).
– Reverse gear must be engaged.

Moving mirror to its initial position

The mirror swivels back to its initial position when:

– The vehicle is shifted out of reverse gear **or**

▷ The position of the control switch for door mirror adjustment is changed.

Interior mirror

Basic position – lever forward
Anti-dazzle setting – lever back

Note on operation

▷ When the interior mirror is being adjusted, the anti-dazzle lever **A** must point forward.

E - *Light-emitting diodes (LED)*
F - *Button for automatic anti-dazzle function*
G - *Light sensors*

Automatic anti-dazzle interior mirror

Sensors on the front and rear sides of the interior mirror measure the incident light. The mirrors automatically change to anti-dazzle position or revert to their normal state, depending on the light intensity.

Note on operation

The incident light in the area of light sensors **G** must not be restricted (e.g. by stickers on the windscreen).

Switching off automatic anti-dazzle operation

▷ Press button **F**.
Light-emitting diode **E** goes out.

Note on operation

The anti-dazzle function switches off automatically if:

– Reverse gear is engaged **or**

– Interior lighting **and/or**
reading lights in the front are switched on.

Switching on automatic anti-dazzle function

▷ Press button **F**.
Light-emitting diode **E** lights up.

⚠ Warning!

Risk of injury. Electrolyte fluid can emerge from broken mirror glass. This fluid irritates the skin and eyes.

▷ If the electrolyte fluid should come into contact with the skin or eyes, immediately rinse it off with clean water.
See a doctor if necessary.

Risk of damage to paintwork, leather, plastic parts and clothing. Electrolyte fluid can be removed only while it is still wet.

▷ Clean the affected parts with water.

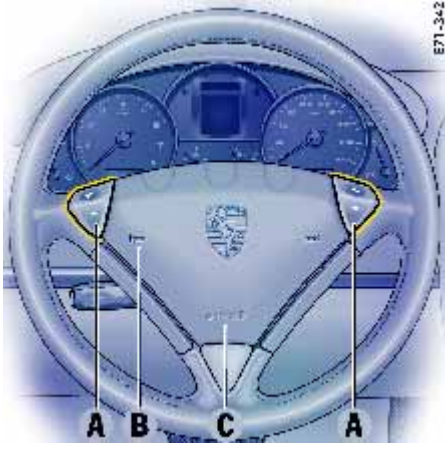

Steering wheel

Tiptronic rocker switches

The Porsche Tiptronic is a six-speed transmission and features an “automatic” and a “manual” gearshift mode.

You can change temporarily to manual mode or shift gear in manual mode with the rocker switches **A** on the steering wheel.

▷ For further information on gearshifting with Tiptronic S:
Please observe the chapter “TIPTRONIC S” on Page 176.

Horn

▷ Press button **B** to operate the horn.

Airbag unit

The airbag unit **C** is located behind the padded steering wheel boss.

In conjunction with the seat belts, the “airbag” is a safety system designed to provide the driver with maximum protection from injury in an accident.

▷ For further information on the airbag system:
Please observe the chapter “AIRBAG SYSTEMS” on Page 217.

Steering wheel heating

The steering wheel heating is switched on and off automatically when the ignition is switched on depending on the interior temperature.

On vehicles with manually controlled air conditioning

The steering wheel heating **switches itself on**, if the following criteria are met at the same time:

1. Low outside temperature.
2. Low engine temperature.
3. The interior temperature setting on the display of the air conditioning is 10 or more bars.

or at the highest level (all bars) of the interior temperature setting on the display of the air conditioning.

The steering wheel heating switches **itself off** again after a warming-up phase, or is switched off if one of the criteria is no longer met.

▷ For more information about setting the interior temperature on vehicles with manual air conditioning:
Please observe the chapter “SETTING TEMPERATURE” on Page 61.

Steering wheel adjustment

Warning!

Risk of accident. The steering wheel may move further than desired if you attempt to adjust it whilst driving.
You can lose control of the vehicle.

▷ Do not adjust the steering wheel whilst driving.

Risk of crushing due to uncontrolled recall of seat memory settings.

▷ Do not leave children in the vehicle unattended.

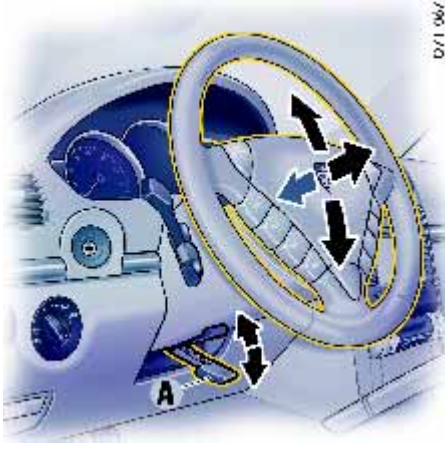

Manual adjustment

1. Swivel locking lever **A** downwards.
2. Adapt the steering wheel setting to the backrest angle and your seat position. Move the steering wheel in the desired direction.
3. Swivel locking lever **A** back until you feel it engage.

Electrical adjustment

▷ Press control switch **B** in the relevant direction until the desired setting is reached.

The steering wheel setting can be stored in the seat memory.

▷ For further information on storing and calling up the steering wheel setting on vehicles with comfort memory:
Please observe the chapter “FRONT SEATS WITH MEMORY” on Page 33.

Multi-functional steering wheel

Warning!

There is a danger of accident if you set or operate the multi-purpose display, radio, navigation system, telephone or other equipment while driving.
This could distract you from the traffic and cause you to lose control of the vehicle.

▷ Operate these components while driving only if the traffic situation allows you to do so safely.

▷ Carry out any complicated operating or setting procedures only with the vehicle stationary.

Depending on the equipment in your vehicle, you can use the function keys of the multi-functional steering wheel to operate the following Porsche communication systems:

– Telephone,

– Radio with CD drive,

– CD changer,

– TV tuner.

Readiness for operation of multi-functional steering wheel

– With ignition switched on **and**

– With Porsche communication systems switched on.

▷ Please observe the operating instructions supplied for the Porsche communication systems before operating the function keys.

Note on operation

The Porsche communication systems cannot be switched on and off using the multi-functional steering wheel.

Operating the function keys

The function keys on the steering wheel (**arrows**) can be operated by pressing and by pulling.

Various functions may require you to press or pull the buttons several times in order to achieve the desired setting.

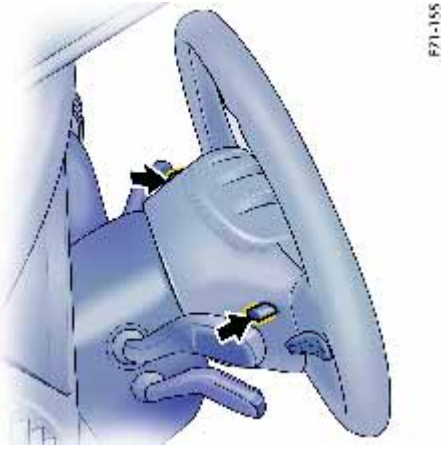

Illumination of steering wheel keys

When the light switch is operated, the key illumination switches on automatically.
The illumination for the function keys and the rocker switches can be switched on and off by the buttons on the back of the steering wheel (**arrow**).

Switching illumination off

▷ Press button.

Switching illumination on

▷ Press button again.

Multi-functional steering wheel with telephone function

▷ Please observe the operating instructions supplied for the Porsche communication systems before operating the function keys.

Answer the telephone

– Take calls.

Hang up the telephone

– End or reject the call.

Increase the volume of the relevant communication system

Decrease the volume of the relevant communication system

MUTE **Switch off the sound**

Next radio station/title

– Select the next radio station or title.

Last radio station/title

– Select the previous radio station or title.

Source selection

– Select available audio source. Depending on the equipment in your vehicle, the following sources are available:
radio, CDS (single CD player), CDC (CD changer).

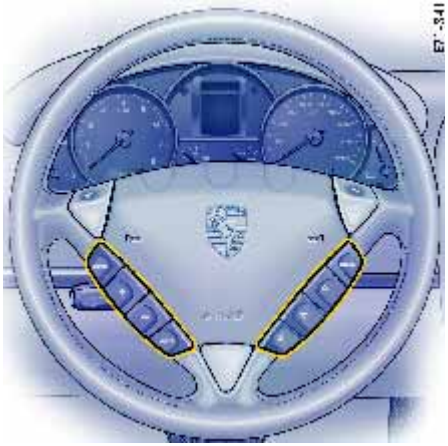

Multi-functional steering wheel without telephone function

▷ Please observe the operating instructions supplied for the Porsche communication systems before operating the function keys.

MAN **Manual tuning**

– Set radio station manually.

SCAN **Scan titles, radio stations**

– Scan titles and radio stations briefly.

\+ **Increase the volume of the relevant communication system**

– **Decrease the volume of the relevant communication system**

△ **Next radio station/title**

– Select the next radio station or title.

▽ **Last radio station/title**

– Select the previous radio station or title.

MUTE **Switch off the sound**

Source selection

– Select available audio source. Depending on the equipment in your vehicle, the following sources are available:
radio, CDS (single CD player),
CDC (CD changer).

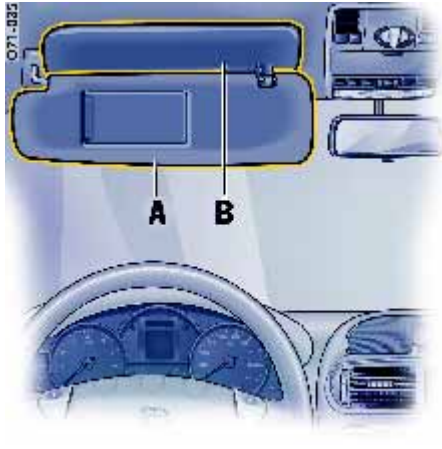

Sun visors

▷ Swing the sun visor **A** down to prevent dazzle from the front.

▷ If you are dazzled from the side, unclip the sun visor **A** from the inner bracket and swivel it round so that it is in front of the door window. You can also swivel sun visor **B** downwards.

Note on operation

Please note that sun visor **B** must be swivelled upwards before swivelling back sun visor **A**. Otherwise, sun visor **B** can no longer be swivelled upwards.

Make-up mirror

The make-up mirror on the rear of the sun visor is closed with a sliding cover.

⚠ **Caution!**

Risk of injury.

▷ Keep the sliding cover closed while driving.

▷ The make-up mirror illumination is switched on automatically when the sliding cover is opened (**arrow**).

Sun blinds, rear side windows

The sun blinds in the rear door trim panels can be pulled out and secured in the holders **A**.

⚠ **Caution!**

Risk of damage.

▷ Pull out sun blinds only when door windows are closed while vehicle is moving.

Retracting sun blinds

▷ Disengage the sun blind from holders **A** and carefully guide it back into the retractor roller.

Air Conditioning, Parking Heater and Rear Window Heating

Overview of air-conditioning systems 59
Opening the cover flap 60
Brief overview –
Manually controlled air-conditioning system 61
Manually controlled air-conditioning system 62
Brief overview – Automatically controlled
2-zone air-conditioning system 66
Automatically controlled 2-zone air-
conditioning 67
Brief overview – Automatically controlled
4-zone air-conditioning system,
front control panel 72
Brief overview – Automatically controlled
4-zone air-conditioning system,
rear control panel 73
Automatically controlled 4-zone air
conditioning 74
Vents 80
Heated rear window 81
Parking heater 82

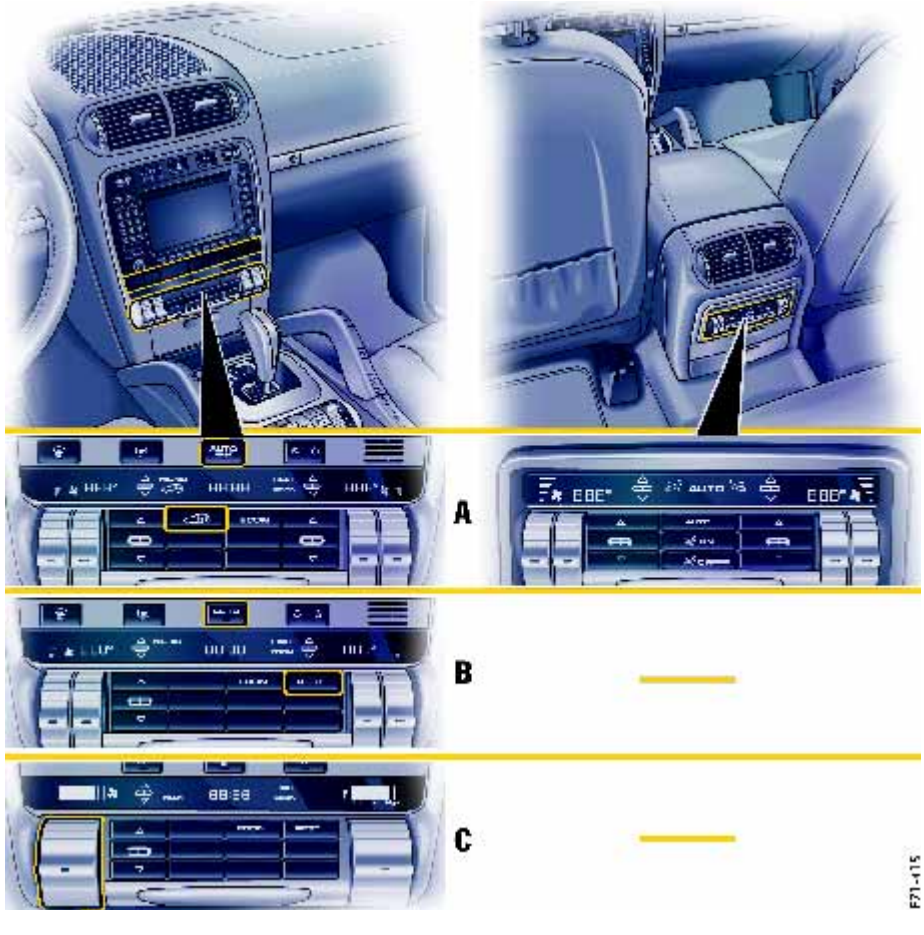

Overview of air-conditioning systems

The following air-conditioning system types may be installed, depending on your vehicle equipment:

A – Automatically controlled 4-zone air-conditioning system

The air-conditioning system controls the set interior temperature completely automatically. Temperature, air quantity and air distribution can be set individually for the front left, front right, rear left and rear right air-conditioned areas.

B – Automatically controlled 2-zone air-conditioning system

The air-conditioning system controls the preselected interior temperature completely automatically. The temperature can be set individually for the left and right air-conditioned areas.

C – Manually controlled air-conditioning system

Air quantity, air distribution and temperature can be set on the control panel of the manually controlled air-conditioning system.

How do I recognise which is “my” air-conditioning system?

A - Button for rear control panel is present

B - AUTO button **and** REST button present

C - Wide rocker switch and **no** AUTO button

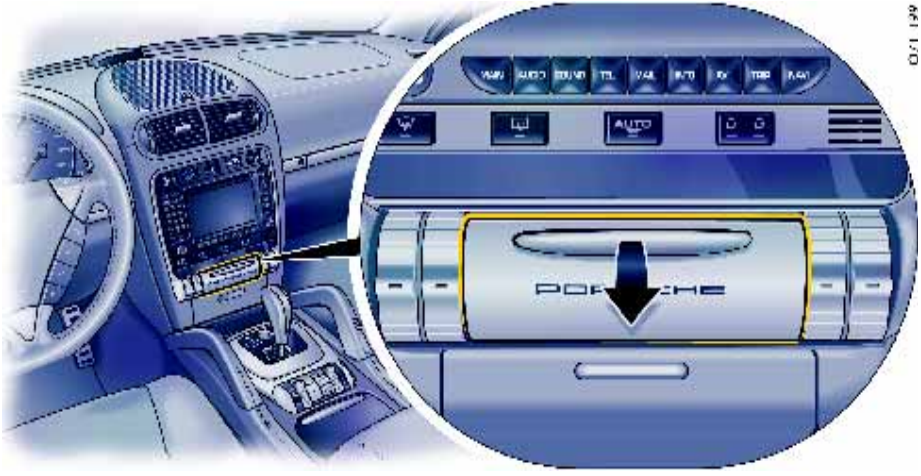

Opening the cover flap

▷ Swivel cover flap down by means of handle (**arrow**).

Brief overview – Manually controlled air-conditioning system

This brief overview does not replace the information provided in the chapter “Manually controlled air-conditioning system”.
In particular, warnings are not replaced by this brief overview.

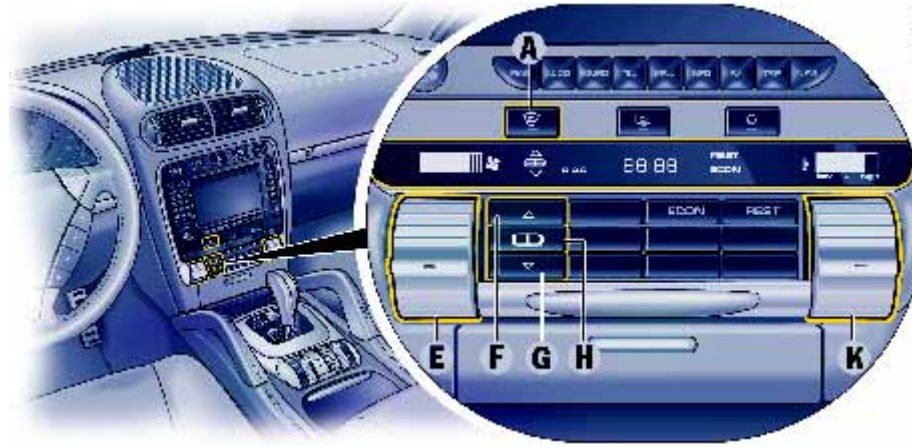

What do I want to do?	What do I have to do?
Setting temperature	Press button **K** up (warmer) or down (colder).
Setting air quantity	Press button **E** up (more) or down (less).
Setting air distribution	Air to windscreen: Press button **F**. Air to central and side vents: Press button **H**. Air to footwell: Press button **G**.
Defrosting windscreen	Press button **A**.

A - *Windscreen defrost*
B - *Heated rear window*
C - *Recirculated air*
D - *Air-conditioning display*
E - *Air quantity button*
F - *Air to windscreen*
G - *Air to footwell*
H - *Air to central and side vents*
I - *ECON button (air-conditioning compressor off/on)*
J - *REST button (engine residual heat)*
K - *Temperature button*

Manually controlled air-conditioning system

Air quantity, air distribution and temperature can be set on the control panel of the manually controlled air-conditioning system.

The individual adjustment is shown on the air-conditioning display.

Note on operation

The air conditioner settings are stored on the respective remote control when switching off the ignition and locking the vehicle. The “Air flow OFF” setting is stored for approx. 60 minutes and the “Recirculated air” setting is stored for approx. 20 minutes.

Setting temperature

The selected temperature is shown in a bar display on the display above the button. The more bars that are displayed, the higher the temperature of the air flowing into the interior.

Increase temperature

▷ Press button for temperature **K** up.

Reduce temperature

▷ Press button for temperature **K** down.

Note

▷ For maximum cooling, activate recirculated air button .

Setting air quantity

The selected air quantity is shown in a bar display on the display above the button. The more bars that are displayed, the more air flows into the interior.

Increase air quantity

▷ Press button for air quantity **E** up.

Reduce air quantity

▷ Press button for air quantity **E** down.

If the air quantity was reduced so much that “OFF” appears on the display, the supply of air from the outside is interrupted.

Warning!

Risk of accident due to impaired vision. The windows may mist up in the air quantity setting “OFF”.

▷ Press button **E** up (increase air quantity).

Setting air distribution

Air to windscreen

▷ Press button .
The air flows to the windscreen.

Air to central and side vents

▷ Press button .
The air flows from the central and side vents. Vents must be open.

Air to footwell

▷ Press button .
The air flows to the footwell.

Switching on circulating-air mode

Warning!

Risk of accident due to impaired vision. In circulating-air mode, the windows may mist up.

- ▷ Only select circulating-air mode for short periods.
- ▷ If the windows mist up, switch circulating-air mode off immediately by pressing the circulating-air button again and select the “Defrost windscreen” function.

- ▷ Press button .
  The indicator light in the button lights up.
  The outside-air supply is interrupted and only the inside air is circulated.

Defrosting windscreen

- ▷ Press button .
  The indicator light in the button lights up.
  The air flows to the windscreen and the front side windows.
  The windscreen is demisted or defrosted as quickly as possible.

Ending the function

- ▷ Press button again.

ECON mode

Warning!

Risk of accident due to impaired vision. The outside air that is flowing in is not dried in Econ mode. The windows may mist up.

- ▷ Do not switch on ECON mode in damp weather.

In ECON mode, the air-conditioning compressor is switched off and this deactivates the cooling function (e.g. to save fuel).
The air-conditioning compressor is **always** switched off at temperatures below 3 °C.

Switching on ECON mode

- ▷ Press button ECON.
  The text ECON appears on the air-conditioning display.
  The air-conditioning compressor is switched off.

Switching off ECON mode

- ▷ If the interior temperature is too high,
  Press button ECON.
  The text ECON disappears from the air-conditioning display.
  The air-conditioning compressor is switched on.

REST mode

Using engine residual heat

The residual heat of the engine can be used to heat the interior for up to 20 minutes after the ignition has been switched off.

▷ Press button REST.
The air-conditioning settings cannot be changed in REST mode.

Ending the function

▷ Press button REST.

Note on operation

If the battery voltage is too low, REST mode is automatically ended.

Information on air-conditioning compressor

The air-conditioning compressor:

– May switch off briefly to ensure sufficient engine cooling if the engine is operating under extreme load.

– Switches off automatically at temperatures below approx. 3 °C and cannot be switched on, even manually.

– Operates most effectively with the windows closed.
If the vehicle has been in the sun for a long time, it is a good idea to ventilate the interior briefly with the windows open.

– Depending on the outside temperature and humidity, condensation can drip from the evaporator and form a pool under the car.
This is normal and not a sign of leakage.

▷ If uncooled air flows out when the lowest temperature has been set (“LO”), switch off the air-conditioning compressor and have the fault remedied.
Consult a qualified specialist workshop. We recommend that you use a Porsche partner for this work since these are staffed with trained personnel and have the necessary parts and tools.

Brief overview – Automatically controlled 2-zone air-conditioning system

This brief overview does not replace the information provided in the chapter “Automatically controlled 2-zone air conditioning”. In particular, warnings are not replaced by this brief overview.

What do I want to do?	What do I have to do?
Switching on automatic air-conditioning system	Press button **C**.
Setting temperature	Left vehicle side: Press button **H** up (warmer) or down (colder). Right vehicle side: Press button **N** up (warmer) or down (colder).
Setting air quantity	Press button **G** up (more) or down (less).
Setting air distribution	Air to windscreen: Press button **I**. Air to central and side vents: Press button **K**. Air to footwell: Press button **J**.
Defrosting windscreen	Press button **A**.

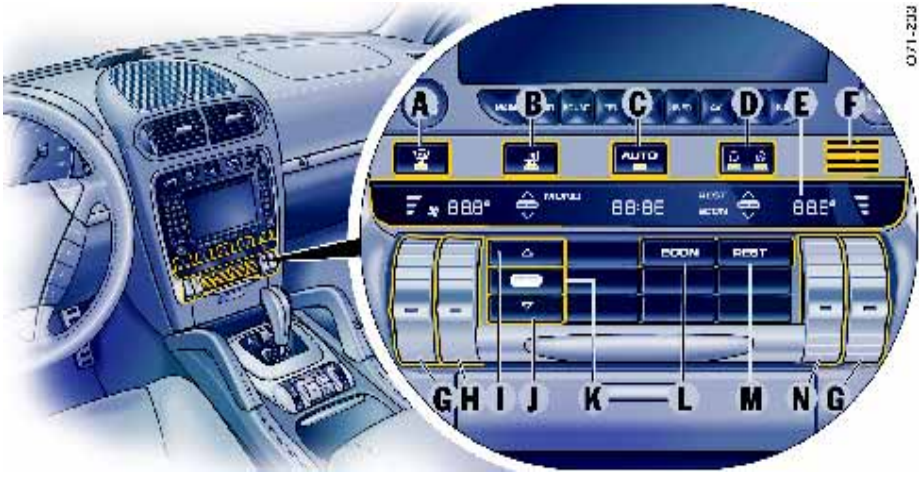

A - *Windscreen defrost*
B - *Heated rear window*
C - *AUTO button (automatic mode)*
D - *Recirculated air, automatic recirculated air*
E - *Air-conditioning display*
F - *Temperature sensor*
G - *Air quantity button*
H - *Temperature button, left side*
I - *Air to windscreen*
J - *Air to footwell*
K - *Air to central and side vents*
L - *ECON button (air-conditioning compressor off/on)*
M- *REST button (engine residual heat)*
N - *Temperature button, right side*

Automatically controlled 2-zone air-conditioning

Depending on various factors (e.g. sunlight, air quality), the air-conditioning system controls the preset interior temperature fully automatically.

The temperature can be set individually/separately for the two left and right air-conditioned areas.

You can manually influence the automatic system. The individual adjustment is shown on the air-conditioning display.

Note on operation

The air conditioner settings are stored on the respective remote control when switching off the ignition and locking the vehicle. The “Air flow OFF” setting is stored for approx. 60 minutes and the “Recirculated air” setting is stored for approx. 20 minutes.

Automatic mode

▷ Press button AUTO.
The indicator light in the button lights up.
Air quantity and air distribution are automatically controlled and variations are compensated.

Note on operation

If necessary, the automatic system can be manually influenced.
This manual setting is retained until the appropriate function button is pressed again or the button AUTO is pressed.

Setting temperature

To suit personal comfort, the interior temperature can be adjusted between 16 °C and 29.5 °C.
Recommendation: 22 °C

The selected temperature is shown on the display above the button.

Increase temperature

▷ Press button for temperature up.
Left side of vehicle: button **H**
Right side of vehicle: button **N**

Reduce temperature

▷ Press button for temperature down.
Left side of vehicle: button **H**
Right side of vehicle: button **N**

If “LO” or “HI” appears on the display, the system is operating at maximum cooling or heating power. Automatic mode is switched off.

If the preselected temperature is changed, the air quantity blowing out can adjust automatically in automatic mode.
The desired temperature is reached more quickly this way.

Setting air quantity

The selected air quantity is shown in a bar display on the display above the button. The more bars that are displayed, the more air flows into the interior.

Increase air quantity

▷ Press button for air quantity **G** up.

Reduce air quantity

▷ Press button for air quantity **G** down.

Press AUTO to return to automatic mode.

If the air quantity was reduced so much that “OFF” appears on the display, the supply of air from the outside is interrupted.

Warning!

Risk of accident due to impaired vision.
The windows may mist up in the air quantity setting “OFF”.

▷ Press button **G** up (increase air quantity).

Setting air distribution

Air to windscreen

▷ Press button △.
The air flows to the windscreen.

Air to central and side vents

▷ Press button ▭.
The air flows from the central and side vents. Vents must be open.

Air to footwell

▷ Press button ▽.
The air flows to the footwell.

Ending air distribution functions

▷ Press the relevant button again **or**

▷ Press button AUTO.

Accepting settings for driver's side for the entire vehicle

The Mono function allows the temperature setting for the driver's side to be accepted for the entire vehicle.

Switching on MONO function

The temperature setting for the driver's side can be accepted for the entire vehicle.

▷ Press button AUTO for 2 seconds.
The text MONO appears on the air-conditioning display.

Ending MONO function

▷ Press button AUTO for 2 seconds **or**

▷ Change the settings in the air-conditioned areas.

Switching on automatic circulating-air mode

▷ Press button once.
The indicator light in the button lights up.
Control of the outside-air supply depends on the air quality.

Note

The recommended operating mode is automatic circulating-air mode.

Switching on circulating-air mode

Warning!

Risk of accident due to impaired vision. In circulating-air mode, the windows may mist up.

- ▷ Only select circulating-air mode for short periods.
- ▷ If the windows mist up, switch circulating-air mode off immediately by pressing the circulating-air button again and select the “Defrost windscreen” function.

- ▷ Press button twice.
  The indicator light in the button lights up.
  The outside-air supply is interrupted and only the inside air is circulated.

Note on operation

If the air-conditioning compressor is switched off manually or automatically, circulating-air mode ends after approx. 3 minutes.

Defrosting windscreen

- ▷ Press button .
  The indicator light in the button lights up.
  The air flows to the windscreen and the front side windows.
  The windscreen is demisted or defrosted as quickly as possible.

Ending the function

- ▷ Press button again **or**
- ▷ Press button AUTO.

ECON mode

Warning!

Risk of accident due to impaired vision. The outside air that is flowing in is not dried in Econ mode. The windows may mist up.

- ▷ Do not switch on ECON mode in damp weather.

In ECON mode, the air-conditioning compressor is switched off and this deactivates the cooling function (e.g. to save fuel).
The air-conditioning compressor is **always** switched off at temperatures below 3 °C.

Switching on ECON mode

- ▷ Press button ECON.
  The text ECON appears on the air-conditioning display.
  The air-conditioning compressor is switched off.

Switching off ECON mode

- ▷ If the interior temperature is too high, press button ECON **or** press button AUTO .
  The text ECON disappears from the air-conditioning display.
  The air-conditioning compressor is switched on.

REST mode

Using engine residual heat

The residual heat of the engine can be used to heat the interior for up to 20 minutes after the ignition has been switched off.

▷ Press button REST .
The air-conditioning settings cannot be changed in REST mode.

Ending the function

▷ Press button REST .

Note on operation

If the battery voltage is too low, REST mode is automatically ended.

Information on air-conditioning compressor

The air-conditioning compressor:

– May switch off briefly to ensure sufficient engine cooling if the engine is operating under extreme load.

– Switches off automatically at temperatures below approx. 3 °C and cannot be switched on, even manually.

– Operates most effectively with the windows closed.
If the vehicle has been in the sun for a long time, it is a good idea to ventilate the interior briefly with the windows open.

– Depending on the outside temperature and humidity, condensation can drip from the evaporator and form a pool under the car. This is normal and not a sign of leakage.

▷ If uncooled air flows out when the lowest temperature has been set (“LO”), switch off the air-conditioning compressor and have the fault remedied.
Consult a qualified specialist workshop. We recommend that you use a Porsche partner for this work since these are staffed with trained personnel and have the necessary parts and tools.

Sensors

To avoid affecting the performance of the air-conditioning system:

▷ Do not cover the sun sensor on the dashboard and the temperature sensor **F** in the front control panel of the air-conditioning system.

Brief overview – Automatically controlled 4-zone air-conditioning system, front control panel

This brief overview does not replace the information provided in the chapter “Automatically controlled four-zone air conditioning”. In particular, warnings are not replaced by this brief overview.

What do I want to do?	What do I have to do?
Switching on automatic air-conditioning system at front	Press button **C**.
Setting temperature at front	for left side: Press button **H** up (warmer) or down (colder). for right side: Press button **Q** up (warmer) or down (colder).
Setting air quantity at front	for left side: Press button **G** up (more) or down (less). for right side: Press button **R** up (more) or down (less).
Setting air distribution at front	Air to windscreen for left or right side: Press button **I** or **P**. Air to central and side vents for left or right side: Press button **K** or **N.** Air to footwell for left or right side: Press button **J** or **O**.
Defrosting windscreen	Press button **A**.

Brief overview – Automatically controlled 4-zone air-conditioning system, rear control panel

This brief overview does not replace the information provided in the chapter “Automatically controlled four-zone air conditioning”. In particular, warnings are not replaced by this brief overview.

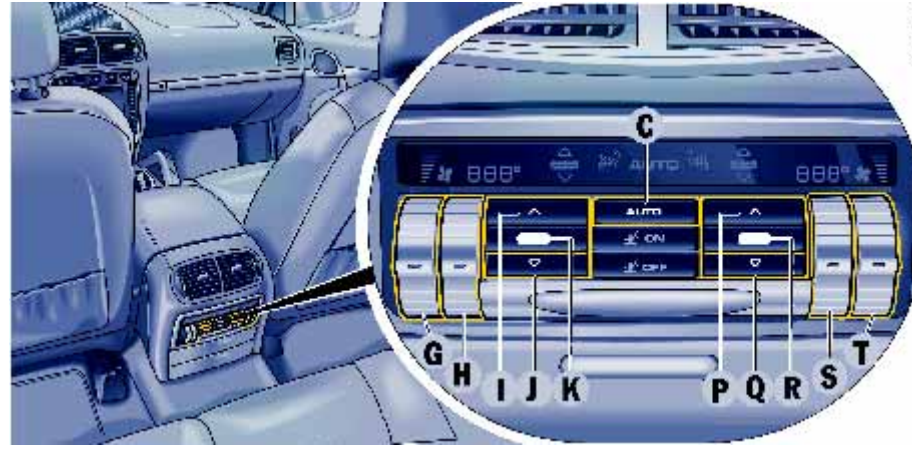

What do I want to do?	What do I have to do?
Switching on automatic air-conditioning system at rear	Press button **C**.
Setting temperature at rear	for left side: Press button **H** up (warmer) or down (colder). for right side: Press button **S** up (warmer) or down (colder).
Setting air quantity at rear	for left side: Press button **G** up (more) or down (less). for right side: Press button **T** up (more) or down (less).
Setting air distribution at rear	Air to side window for left or right side: Press button **I** or **P**. Air to central vent for left or right side: Press button **K** or **R**. Air to footwell for left or right side: Press button **J** or **Q**.

Control panel, front

A - *Windscreen defrost*
B - *Heated rear window*
C - *AUTO button (automatic mode), REST button (engine residual heat)*
D - *Recirculated air, automatic recirculated air*
E - *Air-conditioning display*
F - *Temperature sensor*
G - *Air quantity button, left*
H - *Temperature button, left*
I - *Air to windscreen, left*
J - *Air to footwell, left*
K - *Air to left central and side vents*
L - *Setting for rear air-conditioned areas*
M- *ECON button (air-conditioning compressor off/on)*
N - *Air to right central and side vents*
O - *Air to footwell, right*
P - *Air to windscreen, right*
Q - *Temperature button, right*
R - *Air quantity button, right*

Automatically controlled 4-zone air conditioning

Depending on various factors (e.g. ambient temperature, sunlight, air quality), the air-conditioning system controls the preset interior temperature fully automatically.

Temperature, air quantity and air distribution can be set individually/separately for the four air-conditioned areas front left, front right, rear left and rear right.

You can manually influence the automatic system. The individual adjustment is shown on the air-conditioning display.

Note on operation

The air conditioner settings are stored on the respective remote control when switching off the ignition and locking the vehicle. The “Air flow OFF” setting is stored for approx. 60 minutes and the “Recirculated air” setting is stored for approx. 20 minutes.

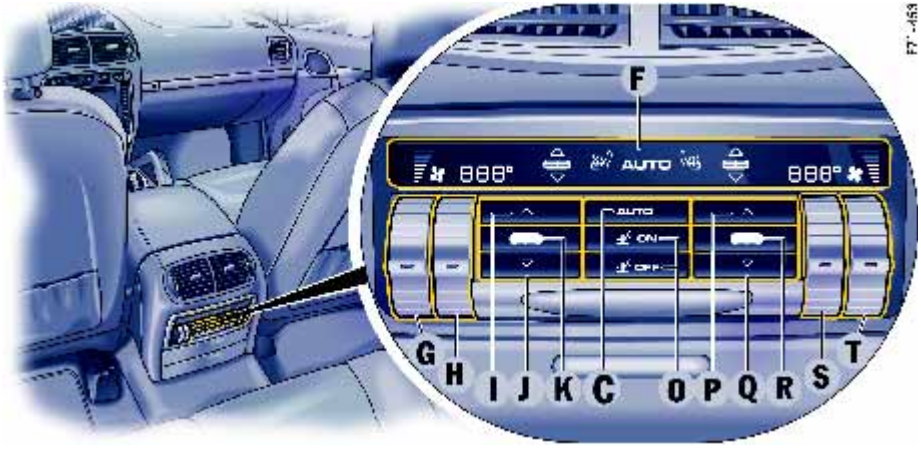

Control panel, rear

C - *AUTO button (automatic mode)*
F - *Air-conditioning/seat heating display*
G - *Air quantity button, left*
H - *Temperature button, left; seat heating, left*
I - *Air to vent, left door pillar*
D - *Air to footwell, left*
K - *Air to left central vent (centre console)*
O - *Seat heating off/on*
P - *Air to vent, right door pillar*
Q - *Air to footwell, right*
R - *Air to right central vent (centre console right)*
S - *Temperature button, right; seat heating, right*
T - *Air quantity button, right*

AUTO Switching automatic mode on/off

You can switch the front and rear air-conditioned areas to automatic mode independently of each other.

▷ Press AUTO button **C** on the front or rear control panel.
The indicator light in button **C** of the front control panel and the AUTO indicator in the rear display panel light up.
Air quantity and distribution are automatically controlled and variations are compensated.

Note on operation

If necessary, the automatic system can be manually influenced.
This manual setting is retained until the appropriate function button is pressed again or the AUTO button **C** is pressed.

Setting temperature

To suit personal comfort, the interior temperature can be adjusted individually between 16 °C and 29.5 °C for each of the four air-conditioned areas.
Recommendation: 22 °C.

The selected temperature is shown on the display above the button.

Increase temperature

▷ Press button for temperature up.
Left air-conditioned area at front: button **H**
Right air-conditioned area at front: button **Q**
Left air-conditioned area at rear: button **H**
Right air-conditioned area at rear: button **S**

Reduce temperature

▷ Press button for temperature down.
Left air-conditioned area at front: button **H**
Right air-conditioned area at front: button **Q**
Left air-conditioned area at rear: button **H**
Right air-conditioned area at rear: button **S**

If “LO” or “HI” appears on the display, the system is operating at maximum cooling or heating power.

If the preselected temperature is changed, the air quantity blowing out can adjust automatically in automatic mode.
The desired temperature is reached more quickly this way.

Setting air quantity

The air quantity can be selected individually for each of the four air-conditioned areas.
The selected air quantity is shown in a bar display on the display above the button. The more bars that are displayed, the more air flows into the interior.

Increase air quantity

▷ Press button for air quantity up.
Left air-conditioned area at front: button **G**
Right air-conditioned area at front: button **R**
Left air-conditioned area at rear: button **G**
Right air-conditioned area at rear: button **T**

Reduce air quantity

▷ Press button for air quantity down.
Left air-conditioned area at front: button **G**
Right air-conditioned area at front: button **R**
Left air-conditioned area at rear: button **G**
Right air-conditioned area at rear: button **T**

Press AUTO button **C** to return to automatic mode.

If the air quantity was reduced at the front control panel so much that “OFF” appears on the display, the supply of air from the outside is interrupted.

Warning!

Risk of accident due to impaired vision caused by misted windows. The windows may mist up in the air quantity setting “OFF”.

▷ Press button **G** up (increase air quantity).

Setting air distribution

Air to the windscreen and side windows

The air quantity can be selected individually for each of the four air-conditioned areas.

– Front control panel:
  The air flows to the windscreen.

– Rear control panel:
  The air flows to the corresponding side window.

▷ Press button .

Air to central and side vents

▷ Press button .

– Front control panel:
  The air flows from the front central and side vents.

– Rear control panel:
  The air flows to the central vents.

▷ Vents must be open.

Air to footwell

▷ Push button forward or back.
  The air flows to the footwell.

Ending air distribution functions

▷ Press corresponding button again **or** press AUTO **C** button.

Accepting settings for driver's side for the entire vehicle

The Mono function allows the temperature and air quantity settings for the driver's side to be accepted for the entire vehicle.

Switching on MONO function

▷ Press button AUTO on the front control panel for 2 seconds.
  The text MONO appears on the air-conditioning display.

Ending MONO function

▷ Press button AUTO on the front control panel for 2 seconds **or**

▷ Change the settings in the air-conditioned areas.

Defrosting windscreen

▷ Press button on the front control panel.
  The indicator light in the button lights up.
  The air flows to the windscreen and the front side windows.
  The windscreen is demisted or defrosted as quickly as possible.

Ending the function

▷ Press button again **or**

▷ Press button AUTO.

Switching on automatic circulating-air mode

▷ Press button on the front control panel once.
  The indicator light in the button lights up.
  Control of the outside-air supply depends on the air quality.

Note

The recommended operating mode is automatic circulating-air mode.

Switching on circulating-air mode

Warning!

Risk of accident due to impaired vision. In circulating-air mode, the windows may mist up.

- ▷ Only select circulating-air mode for short periods.
- ▷ If the windows mist up, switch circulating-air mode off immediately by pressing the circulating-air button again and select the “Defrost windscreen” function.

- ▷ Press button on the front control panel twice.
  The indicator light in the button lights up.
  The outside-air supply is interrupted and only the inside air is circulated.

Note on operation

If the air-conditioning compressor is switched off manually or automatically, circulating-air mode ends after approx. 3 minutes.

ECON mode

Warning!

Risk of accident due to impaired vision. The outside air that is flowing in is not dried in Econ mode. The windows may mist up.

- ▷ Do not switch on ECON mode in damp weather.

In ECON mode, the air-conditioning compressor is switched off and this deactivates the cooling function (e.g. to save fuel).
The air-conditioning compressor is **always** switched off at temperatures below 3 °C.

Switching on ECON mode

- ▷ Press button ECON.
  The text ECON appears on the air-conditioning display.The air-conditioning compressor is switched off.

Switching off ECON mode

- – If the interior temperature is too high, press button ECON **or**
  Press button AUTO.
  The text ECON disappears from the air-conditioning display.
  The air-conditioning compressor is switched on.

AUTO REST mode

Using engine residual heat

The residual heat of the engine can be used to heat the interior for up to 20 minutes after the ignition has been switched off.

- ▷ Press button AUTO on the front control panel.
  The air-conditioning settings cannot be changed in REST mode.

Ending the function

- ▷ Press button AUTO.

Note on operation

If the battery voltage is too low, REST mode is automatically ended.

Sensors

To avoid affecting the performance of the air-conditioning system:

- ▷ Do not cover the sun sensor on the dashboard and the temperature sensor **F** in the front control panel of the air-conditioning system.

Information on air-conditioning compressor

The air-conditioning compressor:

- May switch off briefly to ensure sufficient engine cooling if the engine is operating under extreme load.
- Switches off automatically at temperatures below approx. 3 °C and cannot be switched on, even manually.
- Operates most effectively with the windows closed.
  If the vehicle has been in the sun for a long time, it is a good idea to ventilate the interior briefly with the windows open.
- Depending on the outside temperature and humidity, condensation can drip from the evaporator and form a pool under the car. This is normal and not a sign of leakage.

▷ If uncooled air flows out when the lowest temperature has been set ("LO"), switch off the air-conditioning compressor and have the fault remedied.
Consult a qualified specialist workshop. We recommend that you use a Porsche partner for this work since these are staffed with trained personnel and have the necessary parts and tools.

Disabling control panel for rear air-conditioned areas

The power windows and central locking buttons on the rear doors and the rear control panel for the air conditioning can be disabled by means of the safety button in the armrest of the driver's door.

Switching child protection on/off

▷ Press the safety button to switch child protection on and off.
The symbol in the safety button lights up if child protection is active.

Controlling rear air-conditioned areas with the front control panel

▷ Press button .
The symbol appears on the display.
The rear air-conditioned areas can be controlled from the front control panel.

Ending the function

▷ Press button again.

Note on operation

▷ The function is ended automatically 10 seconds after the last settings are made.

Seat heating, rear

The rear seats can also be heated in vehicles with four-zone air conditioning.

▷ For further information on operating the seat heating:
Please observe the chapter "REAR SEAT HEATING FOR VEHICLES WITH 4-ZONE AIR CONDITIONING" on Page 38.

A - *Continuous opening and closing*
B - *Setting vent direction*

Vents

Opening vents

▷ Rotate thumb wheel **A** upward.

Closing vents

▷ Rotate thumb wheel **A** downward.

Changing air flow direction

▷ Swivel the vent fins **B** in the desired direction.

Note on operation

Fresh air or conditioned fresh air can be delivered from all vents depending on the air-distribution setting.

Fresh-air intake

In order to ensure unhindered air intake:

▷ Keep the fresh-air intake between the windscreen and the engine compartment lid free from snow, ice and leaves.

Heated rear window

The heated rear window is ready for operation when the ignition is on.

Switching on

▷ Press button **B**.
The indicator light in the button lights up.

Depending on the outside temperature, the heating switches off automatically after approx. 5 to 20 minutes.
The heating can be switched back on again by pressing the switch again.

Switching off

▷ Press button **B**.
The indicator light in the button goes out.

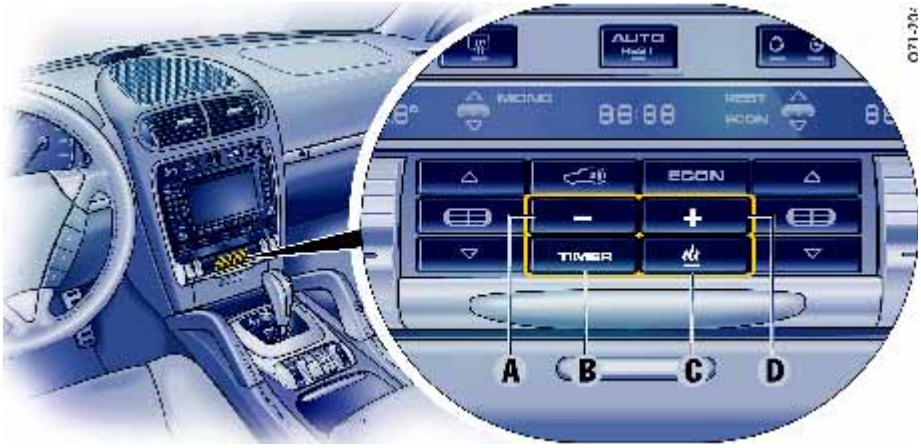

A - *"–" button*
B - *TIMER button*
C - *ON/OFF button*
D - *"–" button*

Parking heater

The parking heater features two functions: parking heating and parking ventilation.

The parking heater is ready for use regardless of the ignition key position.

The parking heater is also used as an auxiliary heater. Operation of the parking heater is therefore clearly audible when outside temperatures are low, even if the parking heater has been manually switched off.

Danger!

Risk of poisoning! The parking heater consumes fuel.

- ▷ Switch off the parking heater before refuelling.
- ▷ Do not operate the parking heater in enclosed spaces (e.g. a garage).

The parking heater is operated using the following buttons on the front air-conditioning control panel:

	Switch parking heater on/off, activate programme
TIMER	Start programming, call up memory locations
+	Set ON times, activate heating function
–	Set ON times, activate ventilation function

Notes on operation

The parking heater runs on fuel, and it therefore cannot be switched on after the fuel reserve warning lights up.

- ▷ For further information on the fuel reserve warning:
  Please observe the chapter "FUEL RESERVE WARNING" on Page 122.

The parking heater must be operated at least once per month with the engine cold.

Ignition off: When the parking heater is running, the remaining running time is shown on the display panel.

Operation of the parking heater is clearly audible when outside temperatures are low and the engine is cold.

Switching parking heater on and off on the control panel of the air conditioning

Switching on

▷ Press ON/OFF button .
The most recently activated function (parking heating or parking ventilation) is switched on.

Switching off

▷ Press ON/OFF button again.

Note on operation

▷ After switching off the parking heater with the ON/OFF button , wait for at least 2 minutes before you press the button again. The combustion chamber is being cleaned during this time.

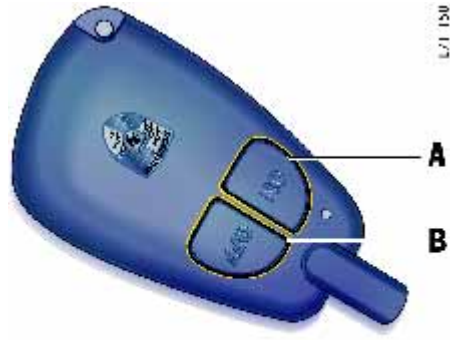

Switching parking heater on and off by radio remote control

The parking heater radio remote control has a range of up to 500 m. The range may be reduced depending on structural and spatial conditions.

Illumination of the light-emitting diode on the remote control indicates only that a transmitted signal is being received. You can make sure that the command has been executed successfully only at the vehicle.

Switching on

▷ Keep button **A** of the remote control pressed for approx. 2 seconds. The light-emitting diode on the remote control lights up green.

Switching off

▷ Keep button **B** of the remote control pressed for approx. 2 seconds. The light-emitting diode on the remote control lights up red.

Note on operation

If the light-emitting diode of the remote control is flashing, the parking heater could not be switched on or off.
Check the range of the remote control and the operational readiness of the parking heater in the vehicle.

▷ Have the parking heater faults remedied. Consult a qualified specialist workshop. We recommend that you use a Porsche partner for this work since these are staffed with trained personnel and have the necessary parts and tools.

E - *Parking ventilation symbol*
F - *ON time symbol*
G - *Memory location symbol*
H - *ON time*
I - *Parking heating symbol*

Programming the parking heater

The parking heater has three independent memory locations for programming the ON times. The ON time together with the associated parking heating or parking ventilation function can be programmed in each memory location.

Complete programming of the parking heater requires definition of the

– Function **and**

– ON time.

Programming function

1. Switch ignition off.
2. Press TIMER button on the front air-conditioning control panel.
   The symbols for the parking heating **I** or parking ventilation **E** functions flash on the display.
3. Select function.
   Press button ✚ for parking heating or button ▬ for parking ventilation.

If no other entry is made within **10 seconds**, the display returns to its initial status.
However, the selected function is retained and is activated when the system is next turned on.

Programming ON times

1. Switch ignition off.
2. Press button TIMER.
3. Select function (parking heating or parking ventilation).
4. Select memory location with button TIMER.
   The desired memory location can be selected by pressing the button TIMER several times.
5. Set the ON time with buttons + and −.
   The time is adjusted in minute steps each time the buttons are pressed briefly. If the button is kept depressed, the time is adjusted faster.
   ON times are valid only for 24 hours.
6. Press ON/OFF button .
   Displays **F** and **G** flash for approx. 10 seconds.
   Flashing of the displays can be ended before this time has elapsed by pressing the ON/OFF button again.
   After operation of the ON/OFF button , the ON time **H**, clock symbol **F** and memory location **G** are displayed for 2 minutes.
   The display then goes out.
   The parking heater has now been programmed and the selected memory location is active (the symbol **G** is lit).

Note on operation

Only **one** memory location can be active at any one time.

Activating a memory location

The parking heater runs for 30 minutes. It then switches itself off automatically.
The programme must be reactivated for each subsequent operating cycle.
To do this:

1. Switch ignition off.
2. Press button TIMER.
3. Select function (parking heating or parking ventilation).
4. Select memory location with button TIMER.
   The ON time which was last saved is displayed.
5. Press ON/OFF button .
   The programme is reactivated.
   Displays **F** and **G** flash for approx. 10 seconds.
   Flashing of the displays can be ended before this time has elapsed by pressing the ON/OFF button again.
   After operation of the ON/OFF button , the ON time **H**, clock symbol **F** and memory location **G** are displayed for 2 minutes.
   The display then goes out.
   The parking heater has now been programmed and the selected memory location is active (the symbol **G** is lit).

Note on operation

Only **one** memory location can be active at any one time.

Example

The parking heater is to activate the parking heating function at 9:48 a.m.
To do this:

1. Switch ignition off.
2. Press button TIMER on the front air-conditioning control panel.
   The symbols for the parking heating or parking ventilation functions flash on the display.
3. Press button +.
   This selects the parking heating function.
4. Select memory location with button TIMER.
5. Set ON time to 9:48 a.m. using the + and − buttons.
6. Press ON/OFF button .
   The parking heater has now been programmed and the selected memory location is active.

Note on operation

If the parking heater is switched on “manually” prior to the programme start of an active memory, this will delete the programming.
The memory location must be reactivated in this case if this setting is desired.
The parking heater will not switch itself on if the memory location is not reactivated.

Parking heater faults

Initial start-up following period of non-utilisation

If you have not used the parking heater for several weeks, the system may require the heater to be switched on several times before it actually "starts up".

▷ Please wait between the individual switch-on attempts for approx. 5 minutes in each case.

Requirement for initial start-up of the parking heater:

– Cold engine.

In the following instances, have the parking heater inspected by a qualified specialist workshop:

– If the parking heater fails to "start up" after the 3rd switch-on attempt.

– If the parking heater has a fault, no function symbol appears on the display, only the remaining running time is displayed. The display flashes on and off briefly and then goes completely dark.

– In the event of a severe accident, the parking heater is automatically switched off as a safety precaution.
The parking heater is not ready for operation.

– If the temperature is too high, the overheating protection automatically switches the parking heater off. The parking heater is not ready for operation.

– If the voltage level is too low, the parking heater is automatically switched off. The parking heater is temporarily unavailable.

We recommend that you use a Porsche partner for this work since these are staffed with trained personnel and have the necessary parts and tools.

Windows and Sliding Roofs

Power windows 88
Brief overview – sliding/lifting roof 92
Sliding/lifting roof..... 93
Brief overview –
Panorama roof system 97
Panorama roof system 98
Emergency operation
of the Panorama roof system 102

Power windows

Warning!

Danger of injury when closing the windows, especially when windows close automatically.

- ▷ Take care to ensure that nobody can be injured when the windows close.
- ▷ Always withdraw ignition key when leaving the vehicle or switch ignition off on vehicles that have Porsche Entry & Drive. Always take the ignition key with you when leaving the vehicle. Uninformed persons could injure themselves by operating the power windows.
- ▷ In case of danger, immediately release the vehicle key or the button in the door handle in vehicles that have Porsche Entry & Drive.
- ▷ Do not leave children in the vehicle unattended.

Tip on driving

- ▷ Always keep the side windows closed while driving off-road.

Readiness for operation of power windows

- With ignition switched on **or**
- A maximum of 10 minutes with door closed and ignition key withdrawn, but only until driver's or passenger's door is first opened. One-touch operation for closing the door windows is available only when the ignition is switched on.

Opening/closing windows

Opening window with the rocker switch

- Press rocker switch until the window has reached the desired position.

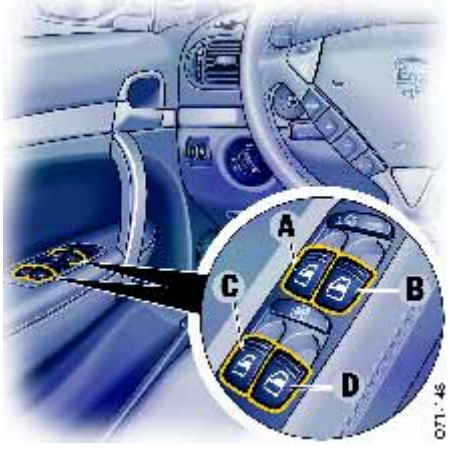

A - *Power window in driver's door*
B - *Power window in passenger's door*
C - *Left rear power window*
D - *Right rear power window*

Note on operation

Rocker switches **A** and **B** in the driver's door have a two-stage function:

- If the switch in question is pressed or pulled to the first level, the front window is opened or closed manually.
- If the switch is completely pressed or pulled to the second level, the front window is opened or closed automatically (one-touch operation).

Power windows in passenger's door and rear doors

Closing window with the rocker switch

▷ Pull rocker switch until the window has reached the desired position.

One-touch operation for front windows

Pull or press rocker switch in the driver's door to its final position.
Window moves to its final position.
Press or pull again to stop the window in the desired position.

Disabling power windows in the rear doors

The power windows, central locking buttons on the rear doors and the rear control panel for the air conditioning can be disabled by means of the safety button in the armrest of the driver's door.

Switching child protection on/off

▷ Press the safety button to switch child protection on and off.
The symbol in the safety button lights up if child protection is active.

*On vehicles **without** Porsche Entry & Drive*

Opening/closing windows with vehicle key

▷ Hold the car key in the door lock in the unlocking or locking position until the windows have reached the desired position.

If you unlock the vehicle with the key at the door lock, only the driver's door is unlocked. In order to prevent the alarm system from being triggered, you must switch the ignition on within 15 seconds of opening the door.

*On vehicles **with** Porsche Entry & Drive*

Closing windows with button in door handle (vehicles with Porsche Entry & Drive)

▷ Hold the button in the door handle when locking the vehicle until the windows and the Panorama roof system have reached the desired position.

Note on operation

The comfort function remains available for approx. 30 seconds after the vehicle has been locked.

Note on operation

If a door window is blocked during closing, it will stop and open again by several centimetres. However, this is **not** the case:

– If the rocker switch is pressed again within 10 seconds of the window being blocked **and**

– The windows are closed using the vehicle key in the door lock (comfort function).

The windows close with their full closing force.

⚠ Warning!

Risk of injury. If the rocker switch is pulled again within 10 seconds of the window being blocked, the window will close with its full closing force.

▷ Take care to ensure that nobody can be injured when the windows close.

One-touch operation is disabled for 10 seconds after the door window is obstructed.

Storing final position of the door windows after connecting the vehicle battery

The end positions of the door windows are lost when the battery is disconnected and reconnected. One-touch operation of the windows is disabled.

Perform these procedures for all windows:

1. Close window completely **once** by pulling rocker switch.
2. Open window completely **once** by pressing rocker switch.

Close window completely **once** again by pulling rocker switch.

Brief overview – sliding/lifting roof

This brief overview does not replace the information provided in the chapter “Sliding/lifting roof”. In particular, warnings are not replaced by this brief overview.

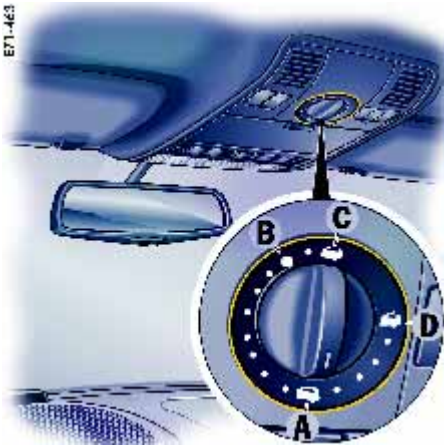

Switch in the roof console

What do I want to do?	What do I have to do?	What do I see?
Opening roof	Turn switch to position **C**. Or: Turn switch to position **B** (noise-optimised position).	Roof opens.
Lifting roof	Turn switch to position **D**.	Roof is lifted.
Close roof	Turn switch to position **A**.	Roof closes.

Sliding/lifting roof

The electric sliding/lifting roof is made of tinted single-sheet safety glass. It is equipped with a sliding roof cover that can be steplessly adjusted manually to protect against the sun.

The sliding/lifting roof is operated by means of a rotary switch in the roof console.

⚠ Warning!

Risk of injury when operating or automatically closing the sliding/lifting roof.

▷ Take care to ensure that nobody can be injured when the sliding/lifting roof is operated.

▷ Always withdraw ignition key when leaving the vehicle or switch ignition off on vehicles that have Porsche Entry & Drive. Always take the ignition key with you when leaving the vehicle. Uninformed persons (e.g. children) could injure themselves by operating the sliding/lifting roof.

▷ In case of danger, operate the rotary switch in the opposite direction or release the vehicle key immediately.

▷ Always keep the sliding/lifting roof and the side windows closed while driving off-road.

Readiness for operation of the sliding/lifting roof

– With ignition switched on.

– With ignition key withdrawn until door is first opened, but only for a maximum of 10 minutes.

Readiness function of sliding/lifting roof switches off after 10 minutes

If the vehicle is unlocked, the sliding/lifting roof can no longer be operated after 10 minutes (to save the vehicle battery). The power supply is switched back on when the ignition is switched on or the engine is started.

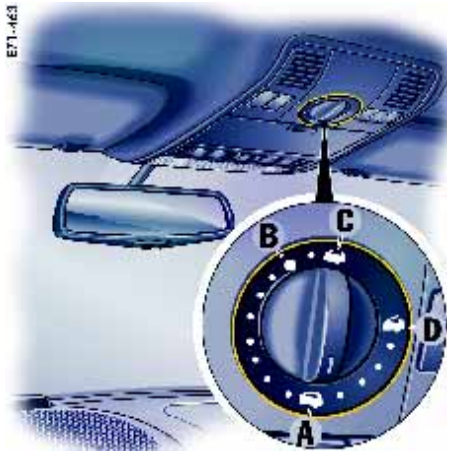

A - *Close roof*
B - *Open roof (noise-optimised position)*
C - *Open roof*
D - *Lift roof*

Note on operation

Using the automated presetting system, every usable sliding/lifting roof position can be controlled directly with the rotary switch.

A - Closing the sliding/lifting roof

▷ Turn rotary switch to position **A**.

Note on operation

The sliding/lifting roof is equipped with a force limiter. If the sliding/lifting roof is obstructed during the closing process, the sliding/lifting roof opens again immediately.

Closing the sliding/lifting roof after operation of the force limiter

▷ Remove the obstruction.

▷ Turn rotary switch to position **A** again.

B - Opening sliding/lifting roof (noise-optimised position)

▷ Turn rotary switch to position **B**.

The sliding/lifting roof opens in switch position **B** until it reaches the best position from the point of view of noise. It can be opened fully, however, if you continue to turn the switch beyond the limit to position **C**.

C - Opening sliding/lifting roof completely

▷ Turn rotary switch beyond stop position **B** to switch position **C**.
This requires a somewhat greater force.
When released, the rotary switch returns on its own to position **B**.

D - Lifting sliding/lifting roof

▷ Turn rotary switch between switch positions **A** and **D** until it reaches the required position. The roof is lifted completely in switch position **D**.

Comfort function on vehicles without Porsche Entry & Drive

Closing the sliding/lifting roof

▷ Hold the car key in the door lock in the locking position until the windows and the sliding/lifting roof have reached the desired position.

Comfort function on vehicles with Porsche Entry & Drive

Closing the sliding/lifting roof

▷ Hold the car key in the door lock in the locking position until the windows and the sliding/lifting roof have reached the desired position
or

▷ Hold the button in the door handle when locking the vehicle until the windows and the sliding/lifting roof have reached the desired position.

Emergency operation of sliding/ lifting roof

If the sliding/lifting roof is defective, this can be closed or opened manually.

▷ Before performing emergency operation, please check whether the fuse is defective.

⚠ Warning!

Risk of injury when closing the roof.

▷ Take care to ensure that nobody can be injured when the roof elements are operated.

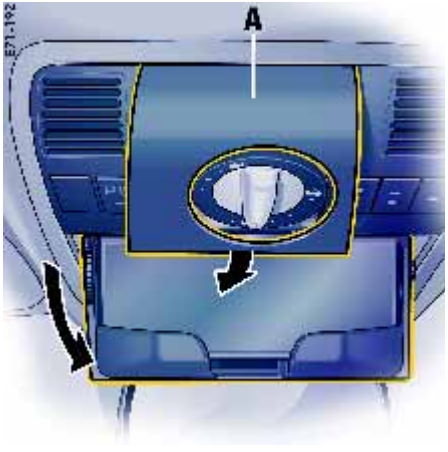

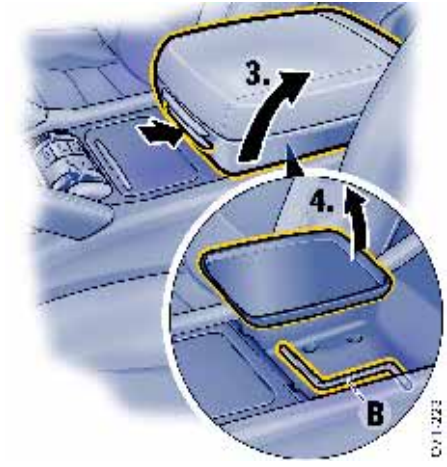

1. Open the glasses case in the roof console (**arrow**).
2. Unclip cover **A**.
3. Fold up armrest.
4. Remove key **B** from the lower oddments tray (underneath the rubber mat) in the centre console.

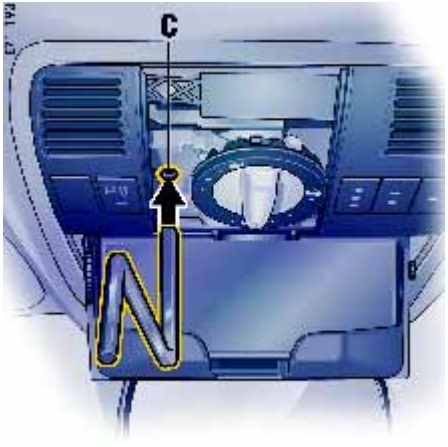

5. Insert the key in opening **C** until it can be felt and heard to engage.
   This requires a somewhat greater force.

6. Hold the key in this position and turn.
   To close the roof – turn to the right
   To open the roof – turn to the left

7. Remove the key and return it to the oddments tray.

8. Clip in cover.

▷ Have the fault remedied. Consult a qualified specialist workshop. We recommend that you use a Porsche partner for this work since these are staffed with trained personnel and have the necessary parts and tools.

Brief overview – Panorama roof system

This brief overview does not replace the information provided in the chapter “Panorama roof system”.
In particular, warnings are not replaced by this brief overview.

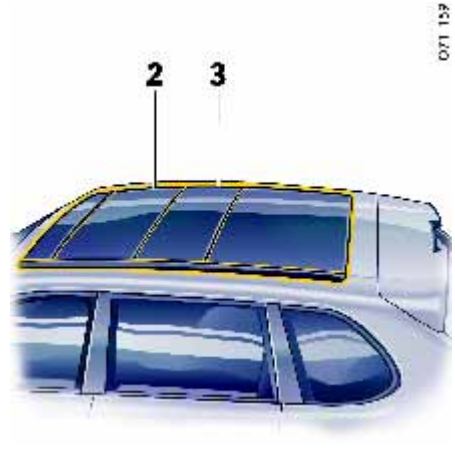

Elements of the Panorama roof system

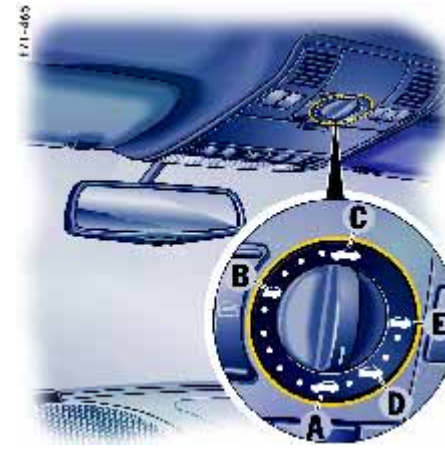

Switch in the roof console

What do I want to do?	What do I have to do?	What do I see?
Open roof completely (roof elements 2 and 3)	Turn switch to position **C**.	Roof elements 2 and 3 open.
Open roof element 2	Turn switch to position **B**.	Only roof element 2 opens.
Open roof element 3	Turn switch to position **E**.	Only roof element 3 opens.
Lift roof element 3	Turn switch to position **D**.	Only roof element 3 is lifted.
Close roof	Turn switch to position **A**.	All opened roof elements are closed.

Panorama roof system

The Panorama roof system of your Porsche consists of a total of four roof elements.

Roof element 1 is the draught deflector. This adjusts itself according to the speed, and helps protect from the disturbing effects of the wind when the Panorama roof system is open, especially at high speeds or in the case of turbulent air flow.

Both **roof elements 2 and 3** can be moved in the vehicle's longitudinal direction by operating the rotary switch. Roof element **3** can also be raised. This allows the interior to be better ventilated.

Roof element 4 is a fixed glass element and completes the Panorama roof system.

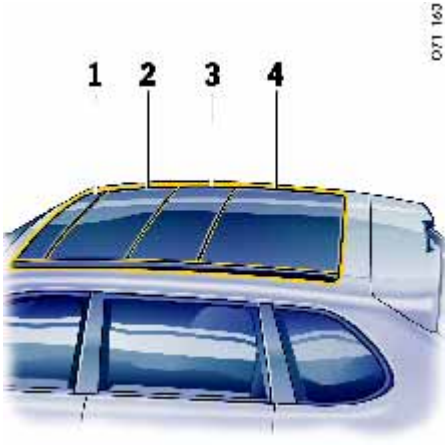

1 *- Draught deflector*
2 *- Sliding roof element*
3 *- Sliding/lifting roof element*
4 *- Fixed glass element*

⚠ Caution!

Risk of damage when activating the Panorama roof system due to improperly fitted roof superstructures.

▷ Check that the roof superstructures are properly fitted before starting to drive.

▷ Make sure that there is sufficient clearance between the Panorama roof system and the fitted roof superstructures.

Readiness for operation of the Panorama roof system

– With ignition switched on.

– With ignition key withdrawn until door is first opened, but only for a maximum of 10 minutes.

Readiness function of Panorama roof system switches off after 10 minutes

If the vehicle is unlocked, the Panorama roof system can no longer be operated after 10 minutes (to save the vehicle battery). The power supply is switched back on when the ignition is switched on or the engine is started.

A - Close the Panorama roof system completely
B - Open sliding roof element
C - Completely open Panorama roof system
D - Lift sliding/lifting roof element
E - Open sliding/lifting roof element

Note on operation

Using the automated presetting system, every usable roof position can be controlled directly with the rotary switch.

▷ Always keep the Panorama roof system and the side windows closed while driving off-road.

⚠ Warning!

Risk of injury when operating or automatically closing the Panorama roof system.

▷ Take care to ensure that nobody can be injured when the Panorama roof system is operated.

▷ Always withdraw ignition key when leaving the vehicle or switch ignition off on vehicles that have Porsche Entry & Drive. Always take the ignition key with you when leaving the vehicle. Uninformed persons (e.g. children) could injure themselves by operating the Panorama roof system.

▷ In case of danger, operate the rotary switch in the opposite direction or release the vehicle key immediately.

A - Close Panorama roof system completely

▷ Turn rotary switch to position **A**.

B - Open sliding roof element completely

▷ Turn rotary switch to position **B**.
Roof element 2 is opened completely. The roller blind opens automatically to the selected opening width.

C - Completely open Panorama roof system

▷ Turn rotary switch beyond stop position **B** to switch position **C**.
Roof elements 2 and 3 are opened completely.
The roller blind opens automatically to the selected opening width.

D - Lift sliding/lifting roof element

▷ Turn rotary switch to position **D**.
Roof element 3 is lifted completely. The roller blind does not change its position here.

E - Completely open sliding/lifting roof element

▷ Turn rotary switch to position **E**.

▷ **Roof element 3** is opened completely. The roller blind opens automatically to the selected opening width.

Comfort function on vehicles without Porsche Entry & Drive

Opening and closing the Panorama roof system

▷ Hold the car key in the door lock in the unlocking or locking position until the windows and the Panorama roof system have reached the desired position.

Comfort function on vehicles with Porsche Entry & Drive

Opening and closing the Panorama roof system

▷ Hold the car key in the door lock in the unlocking or locking position until the windows and the Panorama roof system have reached the desired position.

Closing the Panorama roof system

▷ Hold the button in the door handle when locking the vehicle until the windows and the Panorama roof system have reached the desired position.

Force limiter for the Panorama roof system

All roof elements are equipped with a force limiter. If the sliding roof element or the sliding roof/lifting roof element is obstructed during the closing or opening process, the respective roof element opens or closes again immediately.

Closing a roof element after activation of the force limiter

1. Remove the obstruction.
2. Turn rotary switch to position **A** again.

Electric emergency closing function

⚠ **Warning!**

Risk of injury from the emergency closing function for the Panorama roof system. The force limiter is not available and the roof elements will close with full force.

▷ Take care to ensure that nobody can be injured when the Panorama roof system is closed.

If the roof cannot be closed due to dirt, ice or a similar reason:

1. Turn rotary switch to position **A**.
2. Hold the rotary switch in position **A** until all roof elements are completely closed.

Storing final position of the Panorama roof system

The final positions of the Panorama roof system are lost after disconnecting/reconnecting the vehicle battery or if the battery is exhausted as well as after jump lead starting.

⚠ **Warning!**

Risk of injury when closing the Panorama roof system. The force limiter is not available and the roof elements will close with full force.

▷ Take care to ensure that nobody can be injured when the Panorama roof system is closed.

1. Switch ignition off.
2. Turn rotary switch to position **A**.
3. Switch ignition on.
4. Press rotary switch up at its front edge in position **A** and keep pressed.
   The teaching process begins after around 5 seconds. Keep the rotary switch pressed in position until the roller blind and all roof elements have completely stopped moving. The process lasts a maximum of 20 seconds.
5. Release the rotary switch.
   The raised sliding/lifting roof element **3** closes automatically. The teaching process is then completed.

Note on operation

If the procedure is interrupted, saving the final positions must be started from the beginning again.

Roller blind

A roller blind is integrated into the Panorama roof system and can be adjusted by operating the rocker switch in the roof console.

Opening/closing roller blind

The rocker switch has a two-stage function:

– If the rocker switch is pressed to the first stage, the roller blind is opened or closed as long as the rocker switch is being pressed.

– If the rocker switch is pressed completely, the roller blind opens or closes to the final position.

Opening the roller blind

▷ Press rocker switch to the rear **F**.

Closing the roller blind

▷ Press rocker switch to the front **G**.

Note

If the rocker switch is pressed completely while the roof elements are moving, the roller blind opens or closes to the final position after the roof elements have reached the selected position.

Roller blind cleaning position

1. Close Panorama roof system and roller blind completely.
2. Turn rotary switch to position **C**.
   The Panorama roof system opens completely.
3. When the Panorama roof system has reached the final position, keep the rocker switch **G** pressed at the front for longer than 3 seconds until the roller blind is completely closed.
4. Remove dirt (e.g. leaves).
5. Keep the rocker switch **F** pressed at the rear until the roller blind is completely closed.
6. Close sliding roof element.

Caution!

Risk of damage if the Panorama roof system and roller blind are in the roller blind cleaning position while driving.

▷ Close the Panorama roof system completely once before driving off.

Emergency operation of the Panorama roof system

Perform emergency operation only under exceptional circumstances if the electric emergency closing function cannot be performed and the end position cannot be stored.

▷ Before performing emergency operation, please check whether the fuse is defective. After the fuse has been changed, the end positions of the Panorama roof system must be stored again.

Warning!

Danger of injury and risk of damage when closing the roof.

▷ Take care to ensure that nobody can be injured when the roof elements are operated.

▷ Do not operate the Panorama roof system with the rotary switch during and after emergency operation.

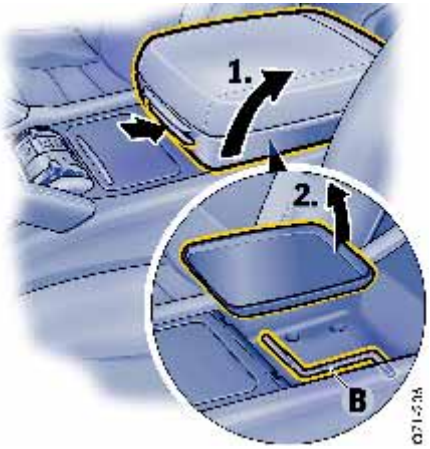

1. Fold up armrest.
2. Remove key **B** from the lower oddments tray (underneath the rubber mat) in the centre console.

3. Unclip cover.
4. Insert the key in opening **H** or **I** until it can be felt and heard to engage.
   This requires a somewhat greater force.
   H – Emergency operation for the sliding roof element and the draught deflector
   I – Emergency operation for the sliding/lifting roof element
5. Hold the key in this position and turn.
   To close the roof – turn clockwise
   To open the roof – turn counter-clockwise

Note on operation

When performing emergency closing for the sliding/lifting roof element, make sure that the roof element is completely closed (centre position between sliding and lifting roof position).

6. Remove the key and return it to the oddments tray.
7. Clip in cover.

To rule out malfunctions in the system, the end positions of the Panorama roof system must be saved again after emergency operation.

▷ Have the fault remedied. Consult a qualified specialist workshop. We recommend that you use a Porsche partner for this work since these are staffed with trained personnel and have the necessary parts and tools.

Lights, Direction Indicators and Windscreen Wipers

Light switch.....105
Instrument illumination.....107
Manual headlight beam adjustment.....107
Automatic headlight beam adjustment 107
Direction indicator/high beam/
headlight flasher stalk 108
Hazard warning lights.....108
Interior lighting 109
Comfort lighting.....111
Coming Home function (off delay).....111
Door-surrounding lighting.....112
Emergency-call button.....112
Brief overview – windscreen wipers 113
Windscreen wiper/washer stalk.....114

*Light switch **with** driving light assistant*

*Light switch **without** driving light assistant*

Light switch

- **Light is switched off.**

Driving light assistant

Side lights

Number plate light,
instrument illumination

Dipped beam, high beam

Only with ignition on

Fog lights

Only when side lights or dipped beam are switched on:
Pull switch to first click.
Indicator light lights up.

Rear fog light

Pull switch to second click.
Indicator light lights up.

Note on operation

If the ignition key is withdrawn and the door is opened while the lights (not the parking light) are on, an audible signal (gong) warns of possible battery discharge.

In some countries, differences are possible due to provisions of law.

Automatic driving light assistant

The driving light assistant is a comfort function. Your Porsche's driving light (dipped beam) is switched on and off automatically dependent on the ambient brightness.

Despite possible support by the driving light assistant, it is the responsibility of the driver to switch on the driving light using the conventional light switch in accordance with the relevant national regulations.

Activating the headlights using the driving light assistant therefore does not absolve the driver of responsibility for correct operation of the driving light.

The dipped beam is switched on automatically in the following situations:

- Dusk
- Darkness
- Driving through tunnels
- Rain (in conjunction with rain sensor)
- Motorway driving

Note on operation

Fog is not recognised.

▷ In the event of fog, the driving light must be switched on manually.

⚠ Warning!

Risk of accident due to driving without lights.

▷ Always carefully monitor the automatic driving light control.

Off delay and door-surrounding lighting

Off delay and door-surrounding lighting are active when the automatic driving light assistant is switched on.

For information on the off delay:

▷ Please observe the chapter “COMING HOME FUNCTION (OFF DELAY)” on Page 111.

For information on door-surrounding lighting:

▷ Please observe the chapter “DOOR-SURROUNDING LIGHTING” on Page 112.

Motorway function

The light is switched on at speeds of over 140 km/h (90 mph). If you are travelling slower than 65 km/h (40 mph), the driving light is switched off after a delay of approx. 2 minutes if the external lighting conditions permit.

Rain function

The driving light is switched on automatically after five seconds of continuous wiper operation.

The driving light is switched off approx. 4 minutes after the wipers have stopped.

A - *Instrument illumination*
B - *Manual headlight beam adjustment*

Instrument illumination

When the light is switched on, the brightness of the instrument illumination can be adjusted by turning thumb wheel **A**.

Manual headlight beam adjustment

The headlights can be steplessly adjusted to the vehicle loading condition using the manual headlight beam adjustment control **B**. Adjusting the headlights ensures that on-coming traffic is not dazzled.

The headlights can only be adjusted when the dipped beam is switched on.

▷ Rotate thumb wheel downwards to lower the light beam.
Rotate thumb wheel upwards to raise the light beam.

Settings

The positions correspond to the following vehicle loading conditions:

0 Vehicle occupied at the front, luggage compartment empty

1 Vehicle fully occupied, luggage compartment empty

2 Vehicle fully occupied, luggage compartment loaded

3 Driver's seat occupied, luggage compartment loaded

Automatic headlight beam adjustment

Vehicles with Bi-Xenon headlights feature automatic headlight beam adjustment.

When the ignition and dipped beam are switched on, the level of the headlight beam automatically changes in accordance with the vehicle load. The level of the headlight beam is automatically kept constant during acceleration and braking.

Checking operation

1. Switch the dipped beam on.
2. Switch ignition on.
   The light beam first dips all the way down and is then adapted to the vehicle load.

If this test point not satisfied, the headlight beam adjustment system must be checked.

▷ Consult a qualified specialist workshop. We recommend that you use a Porsche partner for this work since these are staffed with trained personnel and have the necessary parts and tools.

Direction indicator/high beam/ headlight flasher stalk

Direction indicators, dipped beam and high beam are ready for operation when the ignition is on.

1 – Direction indicator light, left
2 – Direction indicator light, right
Push the stalk to the upper or lower pressure point – direction indicators flash three times

3 – High beam
4 – Headlight flasher
Stalk in centre position – dipped beam (when the light is switched on)

Note on operation

When the high beam is switched on or the headlight flasher is operated, the blue indicator light on the speedometer is lit.

Parking light

The parking light can be switched on only when the ignition is switched off.

▷ Move the stalk up or down to switch on the right or left parking light.

Hazard warning lights

The hazard warning light is ready for use regardless of the ignition lock position.

Switching on and off

▷ Press button **A**.

All direction indicator lights and the indicator light in the button flash when the button is operated.

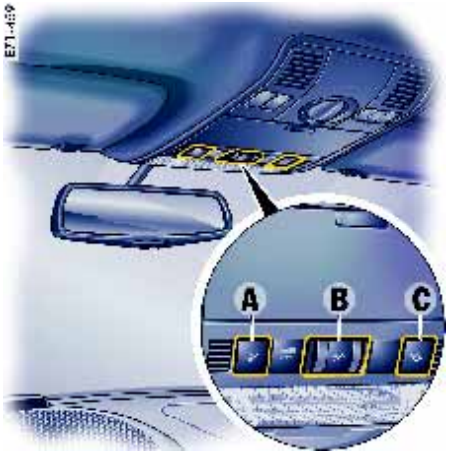

A, C - *Switches for reading lights*
B - *Switch for interior light*

Interior lighting

Reading lights, front

Switching on

▷ Press button **A** or **C**.

Switching off

▷ Press button **A** or **C**.

Interior light, front

Switching on

▷ Move switch **B** to left.

Switching on/off automatically

▷ Move switch **B** to right.The lights are **switched on** when a door is unlocked or opened or when the ignition key is withdrawn from the ignition lock.
The lights are **switched off** with a delay of approx. 30 seconds after the door is closed. The light goes out immediately as soon as the ignition key is inserted in the ignition lock or the vehicle is locked.

Switching off

▷ Move switch **B** to centre position.

Reading light, rear left

Rear reading lights

Switching on

▷ Press toggle switch on left.

Switching on/off automatically

▷ Move toggle switch to centre position.The lights are
switched on when a door is unlocked or opened or when the ignition key is withdrawn from the ignition lock.
The lights are **switched off** with a delay of approx. 30 seconds after the door is closed. The light goes out immediately as soon as the ignition is switched on or the vehicle is locked.

Switching off

▷ Press toggle switch on right.

A - *Button for dimming the comfort lighting*

Comfort lighting

The footwell and door panel lighting improves your orientation inside the vehicle when it is dark. These lights are switched on when the vehicle is unlocked and switched off again automatically when the vehicle is locked.

Dimming the comfort lighting (brightness adjustment)

Once the last door is closed, the footwell and door panel lights are dimmed to the set value.

The comfort lighting is dimmed using button **A** in the front roof console.

▷ Hold down button **A** until the desired level of brightness is reached.

Coming Home function (off delay)

The following lights remain switched on for a certain period to allow you to get out of the vehicle safely and with improved visibility at dusk or in darkness:

– Dipped beam,

– Lights in the door mirrors,

– Side marker lights,

– Number plate lights.

Note on operation

▷ Set light switch to **auto**.

For information on the light switch:
Please observe the chapter “LIGHT SWITCH” on Page 105.

The lights are switched off when the vehicle is locked or, at the latest, after the off delay set on the multi-purpose display has elapsed.

▷ For information on setting the off delay on the multi-purpose display:
Please observe the chapter “SETTING LIGHTING OFF DELAY” on Page 147.

Door-surrounding lighting

The door surrounding lighting enables passengers to enter the vehicle safely. Obstacles on the ground (e.g. puddles) can be identified more easily.

The near field of the vehicle is illuminated with the following lights when the vehicle is unlocked by remote control or Porsche Entry & Drive:

– Lights in the door mirrors,

– Side marker lights,

– Number plate lights.

Note on operation

▷ Set light switch to **auto**.

For information on the light switch:
Please observe the chapter “LIGHT SWITCH” on Page 105.

The door-surrounding lighting switches itself off after expiry of the off delay set on the multi-purpose display or when the ignition is switched on.

For information on setting the off delay on the multi-purpose display:
Please observe the chapter “SETTING LIGHTING OFF DELAY” on Page 147.

Emergency-call button

There are several ways to place an emergency call:

▷ Press SOS button **A or**

▷ Select Emergency call from the Telephone menu
(if no SIM card is inserted or no PIN or PUK has been entered) **or**

▷ Dial the local emergency number.

Note

An emergency call is possible even if the PIN has not been entered.
In many countries, this function is possible even without a valid SIM card. This function depends on the country and network in question.

Brief overview – windscreen wipers

This brief overview does not replace the information provided in the chapter "Windscreen wiper/ washer stalk".
In particular, warnings are not replaced by this brief overview.

Windscreen wiper stalk

Rain sensor stalk

What do I want to do?	What do I have to do?
Automatic wiping at front (rain sensor)	Press the stalk to detent position **1**.
Rain sensor adjustment	Adjust rotary switch **A** in the stalk upwards (wipe more often) or downwards (wipe less often).
Wiping at front	Slow: Move the stalk to detent position **2**. Fast: Move the stalk to detent position **3**. Once: Briefly press stalk to position **4**.
Spraying and wiping at front	Pull stalk to position **5** and hold.
Wiping at rear	Normal: Press stalk to position **6**. Once: Briefly move stalk to position **7**.
Spraying and wiping at rear	Keep stalk pressed in position **7**.

Windscreen wiper/washer stalk

Caution!

Danger of injury when the windscreen wipers operate unintentionally.
Risk of damage to the engine compartment lid, windscreen and wiper system.

- ▷ Only wipe the windscreen when sufficiently wet, otherwise it could be scratched.
- ▷ Loosen frozen wiper blades before driving off.
- ▷ Do not operate headlight washer when it is frozen.
- ▷ Always switch off windscreen wipers in car washes to prevent them wiping unintentionally (rain sensor operation).
- ▷ Do not operate headlight washer in car washes.
- ▷ Always switch off windscreen wipers before cleaning the windscreen to avoid unintentional operation (rain sensor operation).
- ▷ Always hold the wiper arm securely when replacing the wiper blade.
- ▷ Always switch off windscreen wipers before opening the engine compartment lid (wiper switch in position **0**). If the wiper arms are not in their final position, they will automatically move to this position when the engine compartment lid is opened, even if the ignition is switched off.
  The wiper arms remain in this position until the lid is closed and the wiper system is switched off and then on again.

0 – Windscreen wipers off
1 – Rain sensor operation, front windscreen wipers

- ▷ Move wiper stalk upwards to the first click.

Notes on operation

The amount of precipitation on the windscreen is measured. The wiper speed is automatically adjusted accordingly.

The rain sensor remains switched off if the wiper stalk is already in position **1** when the ignition is switched on.

To switch the rain sensor on again:

- ▷ Move wiper stalk to position **0** and then to position **1** – switching on is confirmed by one wipe of the windscreen – **or**
- ▷ Operate windscreen washer system **5** – switching on is confirmed by three wipes of the windscreen – **or**
- ▷ Change the sensitivity of the rain sensor with four-stage switch **A**.

Changing the sensitivity of the rain sensor

Sensitivity can be set with switch **A** in 4 stages:

- ▷ Move rotary switch **A** upwards – high sensitivity.
  The setting is confirmed by one wipe of the windscreen.
- ▷ Move rotary switch **A** downwards – low sensitivity.

2 – Front windscreen wiper – slow

- ▷ Move wiper stalk upwards to the second click.

3 – Front windscreen wiper – fast

- ▷ Move wiper stalk upwards to the third click.

Rain sensor operation is automatically activated at speeds of less than approx. 4 km/h (2.5 mph) if the windscreen wiper is switched on. If you exceed a speed of approx. 8 km/h (5 mph), the system switches to the preselected wiper speed.

4 – Front windscreen wipers – one-touch operation

- ▷ Press the wiper stalk downwards. The front windscreen wipers carry out one wiping cycle.

5 – Front windscreen wiper and washer system

▷ Pull wiper stalk towards the steering wheel. The washer system sprays and wipes while the stalk is pulled towards the steering wheel. When the wiper stalk is released, a few additional wipes are performed.
Headlight washer (on vehicles with Bi-Xenon headlights):
The washer sprays only when dipped beam or high beam is switched on.
To activate the headlight washer system, the wiper stalk must be pulled for longer. However, the headlight washer can be activated again at the earliest after five windscreen washing cycles.
The spray duration is limited.

Maintenance notes

▷ If heavily soiled, repeat wash.

▷ Persistent dirt (e.g. insect remains) should be removed regularly.

▷ For further information on vehicle care: Please observe the chapter “CAR CARE INSTRUCTIONS” on Page 282.

The **front windscreen washer nozzles** are heated when the ignition is on as a precaution against freezing. However, this does not replace the use of antifreeze.

6 – Rear window wiper – intermittent operation

▷ Move wiper lever forward to the first click. The rear window wiper wipes at preset intervals.

7 – One-touch operation of rear window wiper

▷ Briefly press wiper stalk forward. The washer system sprays and the rear window wiper performs three wiping cycles.

Rear window wiper and washer system

▷ Press wiper stalk forwards as far as it will go. The washer system sprays and wipes as long as the stalk is pressed away from the steering wheel. When the wiper stalk is released, a few drying wipes are performed.

Maintenance note

▷ Periodically clean the wiper blades with window cleaner, especially after the vehicle has been washed in a car wash.
We recommend the Porsche window cleaner. If they are very dirty (e.g. with insect remains), they can be cleaned with a sponge or cloth.

If the wiper blades rub or squeak, this may be as a result of the following:

– If the vehicle is washed in an automatic car wash, wax residues may adhere to the windscreen. These wax residues can be removed only by using window cleaner concentrate.

▷ Please observe the chapter “ADDING WASHER FLUID” on Page 274.

Please contact your Porsche partner for further information.

– The wiper blades may be damaged or worn.

▷ Replace damaged wiper blades as soon as possible.

Multi-Purpose Display and Instruments

Instrument panel 118
Oil temperature gauge 120
Tachometer 120
Clock 120
Cooling system 121
Fuel gauge 122
Intelligent Maintenance Computer for the Cayenne (V6) 122
Odometer 123
Speedometer 123
Voltmeter 124
Emission control 125
Operating the multi-purpose display on the instrument panel 126
Displaying/resetting average speed 129
Displaying range on remaining fuel 129
Displaying tyre pressure 129
Displaying compass 129
Displaying navigation information 129
Opening the main menu 129
Operating the telephone via the multi-purpose display 130
Setting speed limit on the multi-purpose display 132
Displaying warning messages 133
Displaying status of level control 134
Displaying status of locks/reduction 134
Displaying average consumption 135
Setting Tyre Pressure Monitoring 135
Switching off passenger compartment monitoring and inclination sensor on the multi-purpose display 144
Synchronous adjustment of door mirrors 145
Changing settings for opening and locking the vehicle 145
Setting lighting off delay 147
Setting the clock 148
Setting compass 149
Changing language for displays 150
Changing units for displays 150
Resetting display to factory settings 150
Overview of warning messages 151
Mobile phones and 2-way radios 160
Porsche Communication Management (PCM) 160
Radio 161
Fire extinguisher 161

Instrument panel

Warning and indicator lights on the tachometer

Emission control warning light (Check Engine)

Airbag warning light

Seat belt warning light

PSM warning light

ABS warning light

Cruise control readiness

Indicator lights in central instrument panel

Direction indicator, left
Indicator light

Direction indicator, right
Indicator light

Warning and indicator lights on the speedometer

Trailer direction indicator
Indicator light

Rear fog light indicator light

Tyre pressure warning light

Differential lock indicator light

Brake warning light

Fog light indicator light

General warning
Observe warning message on the multi-purpose display

High beam indicator light

A Oil temperature gauge
B Tachometer
C Clock
D Clock setting button
E Cooling system temperature gauge
F Multi-purpose display
G Fuel gauge
H Reset button for trip counter display
I Speedometer
J Mileage displays
K Voltmeter

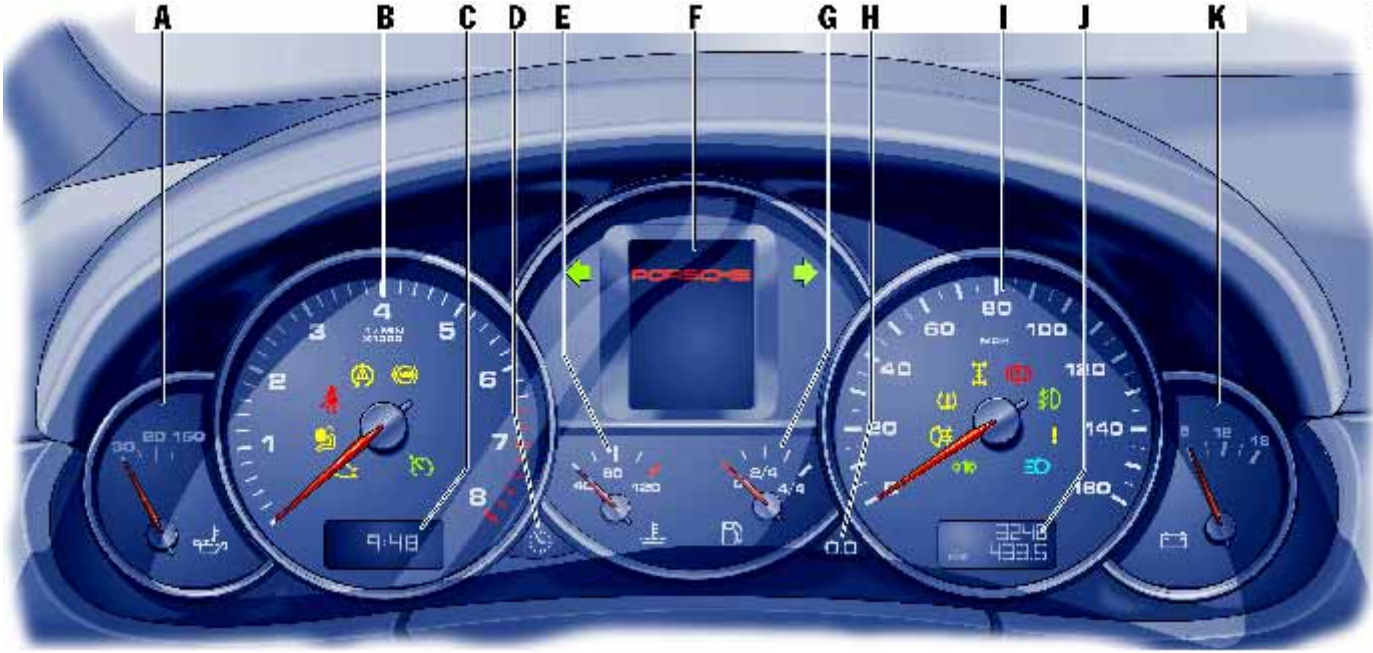
A
B
C
D
E
F
G
H
I
J
K

Oil temperature gauge

A warning message will appear on the multi-purpose display of the instrument panel if the engine oil temperature is too high.

- ▷ Reduce engine speed and engine load immediately if the red zone is reached.
- ▷ For information on warning messages on the multi-purpose display:
  Please observe the chapter “OVERVIEW OF WARNING MESSAGES” on Page 151.

Tachometer

The start of the red zone on the tachometer scale is a visual warning of the maximum permissible engine speed.

If the red zone is reached during acceleration, fuel feed is interrupted in order to protect the engine.

Clock

The clock **A** is adjusted on the multi-purpose display of the instrument panel:

- ▷ Press button **B**.
  The menu SETTINGS > CLOCK is automatically opened on the multi-purpose display.
- ▷ For information on setting the clock:
  Please observe the chapter “SETTING THE CLOCK” on Page 148.

Cooling system

▷ If the cooling system is in any way faulty, consult a qualified specialist workshop. We recommend that you use a Porsche partner for this work since these are staffed with trained personnel and have the necessary parts and tools.

Temperature gauge

Pointer to the left – engine cold

▷ Avoid high engine speeds and heavy engine loading.

Pointer in the middle – normal operating temperature

Pointer may move up to the red area when engine is heavily loaded and outside temperature is high.

Coolant temperature warning

A warning message will appear on the multi-purpose display of the instrument panel if the engine coolant temperature is too high.

▷ Switch engine off and let it cool.

▷ Check radiators and air passages in front end of vehicle for obstructions.

▷ Check coolant level.
Add coolant if necessary.

▷ Have the fault remedied.

▷ For further information on coolant, checking the coolant level and topping up coolant:
Please observe the chapter “CHECKING THE COOLANT LEVEL AND ADDING COOLANT” on Page 271.

Note on operation

To prevent excessive temperatures, the cooling air ducts must not be obstructed by covering with films or “stone guards” etc.

Coolant level warning

A warning message will appear on the multi-purpose display of the instrument panel if the engine coolant level is too low.

▷ Switch engine off and let it cool.

▷ Add coolant.
Have the cause for the fault remedied. Consult a qualified specialist workshop. We recommend that you use a Porsche partner for this work since these are staffed with trained personnel and have the necessary parts and tools.

▷ For further information on coolant, checking the coolant level and topping up coolant:
Please observe the chapter “CHECKING THE COOLANT LEVEL AND ADDING COOLANT” on Page 271.

▷ For information on warning messages on the multi-purpose display:
Please observe the chapter “OVERVIEW OF WARNING MESSAGES” on Page 151.

Caution!

Risk of engine damage.

▷ Do not continue driving if the warning persists even when the engine coolant level is correct.

▷ Have the fault remedied.

Fuel gauge

When the ignition is on, the fuel level is displayed.

▷ For information on fuel quality and filling quantities:
Please observe the chapter “CAPACITIES” on Page 372.

▷ For information on fuel and refuelling:
Please observe the chapter “FILLING WITH FUEL” on Page 280.

If the vehicle’s inclination changes (e.g. going uphill/downhill), minor deviations in the indication may occur.

Fuel reserve warning

When the ignition is switched on or the engine is running, the warning light on the multi-purpose display of the instrument panel lights up if less than approx. 12 litres of fuel remains in the tank or the range on remaining fuel falls below approx. 50 km (30 miles).

▷ Fill up at the next opportunity.

Caution!

A shortage of fuel may cause damage to the emission control system.

▷ Never drive the tank dry.

▷ If the warning lights have come on, do not take bends at high speed.

▷ For further information on the emission control system: Please observe the chapter “EMISSION CONTROL SYSTEM” on Page 279.

Intelligent Maintenance Computer for the Cayenne (V6)

The maintenance intervals (service indicator) shown on the multi-purpose display depend on the mileage, the time since the last service and the operating conditions of the vehicle.

If the vehicle is operated under heavy load, the interval between two services is shorter than under normal operating conditions.

▷ For information on messages on the multi-purpose display:
Please observe the chapter “OVERVIEW OF WARNING MESSAGES” on Page 151.

Odometer

The upper display counts the total mileage, the lower display individual trips.

After exceeding 9,999 kilometres or 6,213 miles, the trip counter returns to 0.

Resetting trip counter to “0”

▷ Press button **A** for approx. 1 second.

Speedometer

The digital speedometer is integrated in the multi-purpose display in the instrument panel.

An analogue display is also located on the right next to the multi-purpose display in the instrument panel.

Voltmeter

The voltmeter indicates the vehicle electrical system voltage.
Normal range: 12 to 16 V.

The voltage may drop considerably when the vehicle is being started.

If the indicator is constantly below 12 V when the engine is running:

▷ Have the battery charging system checked.

▷ Consult a qualified specialist workshop. We recommend that you use a Porsche partner for this work since these are staffed with trained personnel and have the necessary parts and tools.

Battery/generator

A warning message will appear on the multi-purpose display of the instrument panel if the vehicle electrical system voltage drops significantly.

▷ Stop at a safe place and switch the engine off.

▷ For information on warning messages on the multi-purpose display:
Please observe the chapter “OVERVIEW OF WARNING MESSAGES” on Page 151.

Possible causes

– Defect in the battery charging system

– Torn drive belt

Warning!

Risk of accident and risk of engine damage. A torn drive belt means there is no power assistance to the steering (more effort is required to steer) and engine cooling fails.

▷ Do not continue driving.

▷ Have the fault remedied.

▷ Consult a qualified specialist workshop. We recommend that you use a Porsche partner for this work since these are staffed with trained personnel and have the necessary parts and tools.

Danger of steering assistance failing during a long journey in water if the drive belt slips.

▷ If the steering assistance fails, more effort will be required to steer.

Emission control

Warning light

The emission control system detects malfunctions early that could, for example, cause increased pollutant emissions or consequential damage. Faults are indicated by the warning light on the instrument panel which then either lights up continuously or flashes.
The faults are recorded in the control unit's fault memory.

The warning light on the instrument panel lights up when the ignition is switched on as a lamp check and goes out approx. 4 seconds after the engine starts.

The warning light on the instrument panel flashes to indicate operating states (e.g. engine misfiring) which might cause damage to certain parts of the emission control system.

▷ In this case, immediately reduce the engine load by easing off the accelerator.
The warning light in the instrument panel is lit continuously after the critical range is left.

In order to avoid consequential damage to the engine or the exhaust-gas cleaning system (e.g. catalytic converter):

▷ Consult a qualified specialist workshop. We recommend that you use a Porsche partner for this work since these are staffed with trained personnel and have the necessary parts and tools.

Caution!

Risk of damage. If the warning light on the instrument panel continues flashing even when you have eased off the accelerator pedal, the emission control system may overheat.

▷ Stop as soon as possible in a safe place. Make sure that combustible materials, such as dry grass or leaves, cannot come into contact with the hot exhaust system.

▷ Switch off the engine.

▷ Have the fault remedied.

Operating the multi-purpose display on the instrument panel

On-board computer information can be displayed on the multi-purpose display. Additional functions are also available in the main menu which allow you to change the settings for your vehicle.

⚠ Warning!

There is a danger of accident if you set or operate the multi-purpose display, radio, navigation system, telephone or other equipment while driving. Operating these devices while driving could distract you from traffic and cause you to lose control of the vehicle.

- ▷ Operate these components while driving only if the traffic situation allows you to do so safely.
- ▷ Carry out any complicated operating or setting procedures only with the vehicle stationary.

It is not possible to describe all details of the functions in this Driver's Manual.

The examples clearly demonstrate the functional principle and clarify the menu structure.

Note on operation

Depending on the equipment of your vehicle, some information or functions may not be available on the multi-purpose display (e.g. telephone, navigation, audio system, compass or tyre pressure).

Various menus can only be called up when the vehicle is stationary.

Note

The multi-purpose display is ready for operation only when the ignition is on.

Note on operation

By selecting the menu items
MAIN MENU > SETTINGS > FACTORY SET, you can reset all individual settings to the basic works settings.

Note on operation

Arrows at the top and bottom of the menu indicate additional entries.

- ▷ Press rocker switch **A** up or down.

In the COMFORT menu, the menu scrolls automatically as you approach the end of the list.

Operating principle

The multi-purpose display is operated by means of the rocker switch **A** and the ENTER button **B** on the windscreen wiper stalk.

Selection or setting

Using the rocker switch **A**, you can move the bar up and down to select menu items, change between display screens and make settings.

Confirmation

Press the ENTER button **B** to confirm the selected entry. The selected item is then activated.

Operating example: Displaying average consumption

Select items with rocker switch on the wiper stalk in each case and confirm by pressing the ENTER button.

1. MAIN MENU
> VEHICLE INFO
Select and confirm

2. Select Ø CONSUM.

3. Confirm selection.
The average consumption is now displayed.

Returning to starting menu

4. Select BACK.

5. Confirm selection.
VEHICLE INFO menu appears.

6. Select BACK.

7. Confirm selection.
MAIN MENU menu appears.

8. Select BACK.

9. Confirm selection.
Basic display appears.

Note on operation

The measurements for range on remaining fuel and average consumption are not reset when the ignition is switched off. The values can therefore be measured over long periods.
Disconnecting the vehicle battery clears the memories.

Further on-board computer functions can be displayed in the PCM.

▷ Please follow the separate operating instructions for PCM.

Menu overview of the multi-purpose display

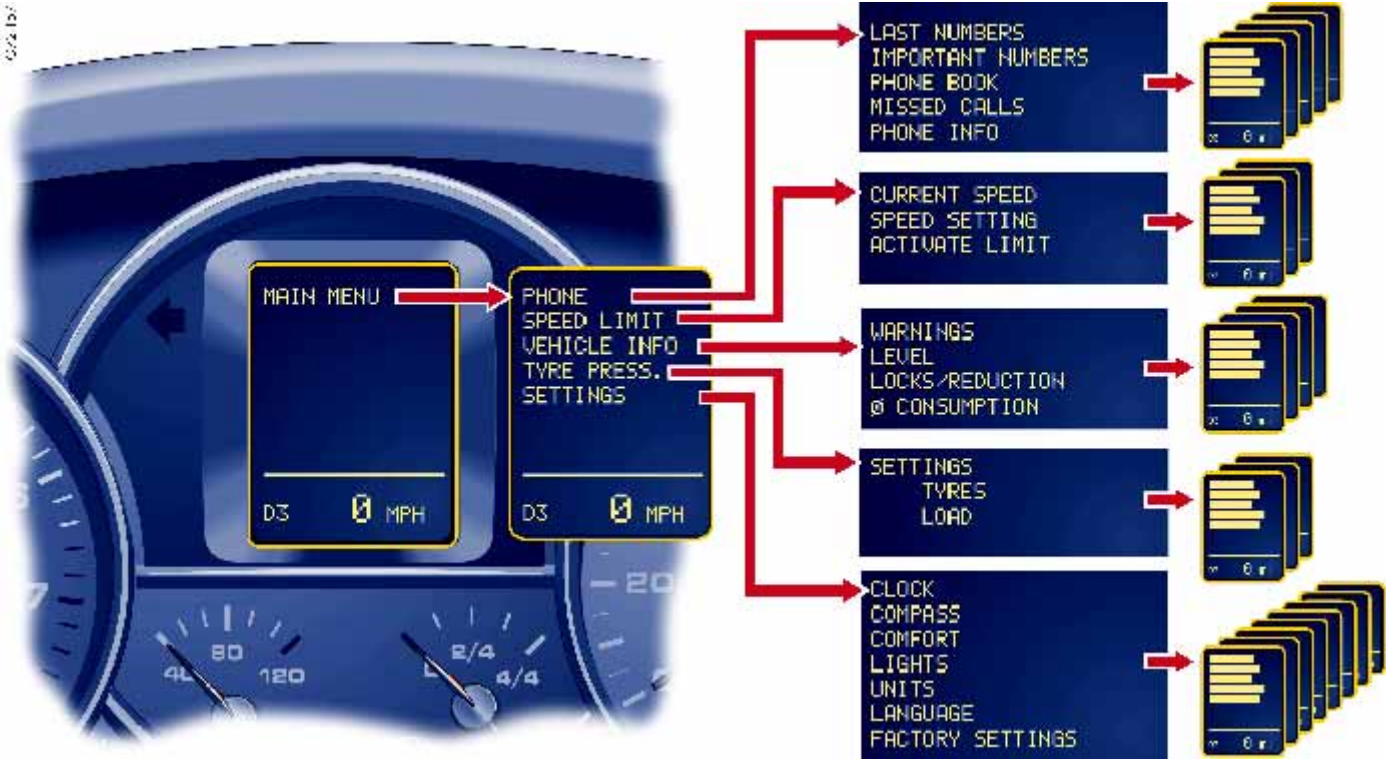

Basic display | Main menu | Sub-menus | Displays and settings in the sub-menus

Displaying/resetting average speed

Displaying average speed

1. Switch ignition on.
2. Select Ø MPH.
   The average speed is displayed.
   The displayed values are based on the distance travelled since the last reset to “zero”.

Resetting average speed

3. Select Ø MPH.
   The average speed is displayed.
4. Press the ENTER button for longer than 1 second.
   The value is cleared.

Displaying range on remaining fuel

1. Switch ignition on.
2. Select remaining range.
   The range on remaining fuel is displayed.

The range on remaining fuel is continuously recomputed while driving based on fuel level, current consumption and average consumption.

Displaying tyre pressure

This display is available only in conjunction with the Tyre Pressure Monitoring option.

1. Switch ignition on.
2. Select TYRE PRESS.
   The tyre pressures are displayed.

The current tyre pressures at the actually present levels are displayed in the “Tyre pressure” screen of the on-board computer. These values would be identical to those of a pressure gauge connected to the four valves. These pressures change while the vehicle is being driven.

– The tyre pressures increase as the temperature in the tyres rises, e.g. during high-speed motorway driving.

– The tyre pressures decrease as the temperatures drop, e.g. during journeys in cold regions (such as mountains).

The values displayed therefore do not allow conclusions to be drawn about possible pressure deviations.

▷ In order to display pressure deviations from the prescribed pressure, select the menu item TYRE PRESS. in the MAIN MENU.

Displaying compass

This display is available only in conjunction with the Compass or PCM option.

1. Switch ignition on.
2. Select COMPASS.
   The compass is displayed.

Displaying navigation information

Navigation information can also be displayed on the multi-purpose display.

This display is available only in conjunction with the Navigation (PCM) option.

1. Switch ignition on.
2. Select NAVIGATION.
   The navigation arrows are displayed.

Opening the main menu

1. Switch ignition on.
2. Select MAIN MENU.
3. Confirm selection.
   The main menu is displayed.

The main menu contains the following functions:

▷ PHONE
MPH-LIMIT
VEHICLE INFO
TYRE PRESS.
SETTINGS

Operating the telephone via the multi-purpose display

Note

The telephone function of the multi-purpose display is linked to both the PCM and the multi-functional buttons on the steering wheel as well as the control stalk.

A SIM card must be inserted in the drawer of the PCM as a prerequisite for telephone operation.

If the link to the network is lost, no PIN is entered, no SIM card is inserted or the telephone is switched off, a corresponding indication will appear.

1. Press the ENTER button.
   The display reverts to the last menu.

Note

The phone number of an incoming call is shown on the multi-purpose display. The name of the caller is shown only if the caller is stored in the telephone book.

Accepting, refusing, ending a call

Incoming calls are shown on the multi-purpose display (PHONE INFO must be activated).

Display on display screen

1. Select ACCEPT or REFUSE.

2. Confirm selection.
   After the call is accepted, END appears in the menu.

Ending a call

3. Select END.

4. Confirm selection.
   The call is ended.

Displaying telephone calls on the multi-purpose display

Automatic indication of an incoming call on the multi-purpose display can be switched on or off with the PHONE INFO menu.

- ON – Incoming calls are automatically indicated on the multi-purpose display.
- OFF – Incoming calls are **not** indicated on the multi-purpose display.

1. MAIN MENU
   > PHONE
   > PHONE INFO
   Select and confirm.

2. Select ON or OFF.

3. Confirm selection.
   The selected item is then accepted.

Displaying last numbers and last-number redial

The LAST NUMBERS menu shows the most recent entries dialled via the respective SIM card.

1. MAIN MENU
   > PHONE
   > LAST NUMBERS
   Select and confirm.
2. Select entry from the list.
3. Confirm selection.
   The connection with the selected party is established.

Displaying important numbers and calling

The IMPORTANT NOS. menu shows the entries stored as important numbers on the SIM card.

1. MAIN MENU
   > PHONE
   > IMPORTANT NOS.
   Select and confirm.
2. Select entry from the list.
3. Confirm selection.
   The connection with the selected party is established.

Note on operation:

If the rocker switch is pressed for longer than one second, the initial letters for which entries exist are shown.
This allows the desired entry to be found more quickly.

Displaying telephone book, selecting party and calling

The PHONE BOOK menu shows the entries of the telephone book that are stored on the SIM card.

1. MAIN MENU
   > PHONE
   > PHONE BOOK
   Select and confirm.
2. Select entry from the list.
3. Confirm selection.
   The connection with the selected party is established.

Note on operation:

If the rocker switch is pressed for longer than one second, the initial letters for which entries exist are shown.
This allows the desired entry to be found more quickly.

Displaying missed calls, calling back party

The telephone numbers of the rejected calls are shown in the MISSED CALLS menu. The numbers are stored on the SIM card.

1. MAIN MENU
   > PHONE
   > MISSED CALLS
   Select and confirm.
2. Select entry from the list.
3. Confirm selection.
   The connection with the selected party is established.

Note on operation:

If the rocker switch is pressed for longer than one second, the initial letters for which entries exist are shown.
This allows the desired entry to be found more quickly.

Setting speed limit on the multi-purpose display

A speed limit can be entered to monitor the driving speed. When it is exceeded, a signal sounds and the multi-purpose display displays the message LIMIT EXCEEDED.

Accepting current speed

You can define the current speed as the speed limit in the menu MPH-LIMIT.

1. MAIN MENU
   > MPH-LIMIT
   Select and confirm
2. Select CURRENT MPH.
3. Confirm selection.
   LIMIT ACTIVE is activated automatically and the selected speed limit is shown.

Presetting speed

You can define a speed limit in the menu MPH-LIMIT.

1. MAIN MENU
   > MPH-LIMIT
   Select and confirm
2. Select MPH SET.
3. Set desired limit:
   – Press briefly: Limit is set in increments of 1mph.
   – Press for longer than 2 seconds: Limit is set in increments of 10 mph.
4. Confirm selection.
   LIMIT ACTIVE is activated automatically.

Activating or deactivating the limit

1. MAIN MENU
   > MPH-LIMIT
   Select and confirm.
2. Select LIMIT ACTIVE.
3. Confirm selection.
   ◪ LIMIT ACTIVE is activated
   ☐ LIMIT ACTIVE is deactivated
4. Select BACK.
5. Confirm selection.
   Sub-menu MPH-LIMIT is displayed.

Example: Check side lights warning message

Displaying warning messages

All current warnings and information relating to the traffic safety of the vehicle can be displayed in the menu WARNINGS.

⚠ Caution!

Warning messages indicate possible faults.

▷ Consult a qualified specialist workshop. We recommend that you use a Porsche partner for this work since these are staffed with trained personnel and have the necessary parts and tools.

1. MAIN MENU
   > VEHICLE INFO
   Select and confirm.
2. Select WARNINGS.
3. Confirm selection.
   NO WARNING is displayed if the vehicle is in perfect condition. Any warning messages which are present are displayed.
4. Press repeatedly to display the warnings one after the other.
5. Confirm selection.
   VEHICLE INFO menu is displayed.

Displaying status of level control

The ground clearance of vehicles equipped with level control is shown in the LEVEL menu.

1. MAIN MENU
   > VEHICLE INFO
   Select and confirm.
2. Select LEVEL.
3. Confirm selection.
   The current level settings are displayed.
4. Confirm selection.
   VEHICLE INFO menu is displayed.

Note on operation

The level control is adjusted by means of the rocker switch behind the gearshift lever in the centre console.

▷ For information on level control and height adjustment:
Please observe the chapter “AIR SUSPENSION WITH LEVEL CONTROL AND HEIGHT ADJUSTMENT” on Page 202.

Displaying status of locks/ reduction

The selected driving programmes for Low Range/ High Range as well as the engaged locks can be displayed.

1. MAIN MENU
   > VEHICLE INFO
   Select and confirm.
2. Select LOCKS/REDUCT.
3. Confirm selection.
   The current settings for
   – Longitudinal lock on/off
   – Reduction on/off
   – Transverse axle differential lock on/off
   are displayed.
4. Confirm selection.
   VEHICLE INFO menu is displayed.

Note on operation

The driving programmes are set by means of the rocker switch behind the gearshift lever in the centre console.

▷ For information on the programmes for Off Road and On Road driving and engaging locks/ reduction:
Please observe the chapter “DRIVING PROGRAMMES FOR ON-ROAD AND OFF-ROAD DRIVING” on Page 184.

Displaying average consumption

1. MAIN MENU
   > VEHICLE INFO
   Select and confirm.

2. Select Ø CONSUM.

3. Confirm selection.
   The average consumption is displayed.
   The displayed value is based on the distance travelled since the last reset to “zero”.

Resetting average consumption

4. Select RESET.

5. Press the ENTER button for longer than 1 second.
   The value is set to “- -.-”.

Setting Tyre Pressure Monitoring

⚠ Safety notes!

Despite the advantages offered by Tyre Pressure Monitoring, it is still the driver’s responsibility to update the settings in the multi-purpose display and maintain the pressures in the tyres. Low tyre pressure reduces the road safety of the vehicle and destroys the tyre and wheel.

- ▷ When a flat tyre has been displayed, stop in a suitable place and check the tyres for damage. If necessary, remedy the damage with tyre sealant or fit the spare wheel.
- ▷ Do not by any means continue to drive with leaking tyres.
- ▷ Sealing the tyre with the tyre sealant is only an emergency repair so you can drive to the next workshop.
  The maximum permitted speed is **80 km/h (50 mph)**.
- ▷ Defective tyres must be immediately replaced by a specialist workshop.
  Tyre repairs are not permissible under any circumstances.
- ▷ Do not drive with tyres whose tyre pressure drops again in a short period of time. Have tyres checked by a specialist workshop.
- ▷ If Tyre Pressure Monitoring is defective (e.g. defective wheel transmitters), contact a specialist workshop immediately and have the damage repaired.
  The tyre pressure will not be monitored by defective Tyre Pressure Monitoring.
  For information on warning messages on the multi-purpose display: Please observe the chapter “OVERVIEW OF WARNING MESSAGES” on Page 151.
- ▷ Tyre Pressure Monitoring gives a warning about tyre damage due to insufficient tyre pressure as well as about a gradual loss of pressure due to foreign objects. Tyre Pressure Monitoring cannot warn you about tyre damage that occurs suddenly (e.g. flat tyre due to acute external effects).
- ▷ If a tyre pressure message is displayed, correct the tyre pressure at the next opportunity.

- ▷ Incomplete entries or selection of the wrong tyres on the multi-purpose display affect correct indication of warnings and messages. The settings in the TYRE PRESSURE menu must be updated after wheel changes, use of a spare wheel or changes in vehicle loading.
- ▷ Use only the pressure differences shown in the TYRE PRESSURE menu or from tyre pressure messages or warnings when correcting the tyre pressure.
- ▷ Tyres lose air over time without a tyre defect being present. A tyre pressure warning will then appear on the multi-purpose display. Correct tyre pressure.

Functional description of Tyre Pressure Monitoring

Tyre Pressure Monitoring continuously monitors tyre pressure and tyre temperature on all four wheels and warns the driver when the tyre pressure is too low.

The display as well as the settings for Tyre Pressure Monitoring take place on the multi-purpose display in the sub-menu TYRE PRESSURE.
However, the tyre pressure must still be set manually on the wheel.

The deviations in the tyre pressures from the required pressures are shown in the sub-menu TYRE PRESSURE.

Example:
If the tyre pressure display shows “–0.3 bar (4 psi)”, you must increase the tyre pressure by 0.3 bar (4 psi).

The tyre pressures to be monitored are fixed in the Tyre Pressure Monitoring system and cannot be changed.

The following settings must be made to permit correct monitoring.

- **Tyres**
  Select the type and size of the tyres fitted on the vehicle.
- **Load**
  Select the type of loading.

Note on operation

Settings can be made only when the vehicle is stationary.

- ▷ For information on tyres and wheels: Please observe the chapter “TYRES AND WHEELS” on Page 292.

Setting the tyre type and size

The settings of the multi-purpose display must be updated after changing wheels or tyres on the vehicle.

The tyre type **and** tyre size must be selected even if the settings for the new set of wheels are the same as for the old wheels.

1. MAIN MENU
   > TYRE PRESS.
   > SETTINGS
   Select and confirm.

2. Select TYRES.

3. Confirm selection.
   The TYRE TYPE list is displayed.

4. Select tyre type (e.g. SUMMER).
   The list with the possible tyre sizes (e.g. for the selection SUMMER) is displayed.

5. Select tyre size (e.g. 18 inch).

6. Confirm selection.
   The current settings are displayed.

After driving off, the system starts to teach the wheels and wheel positions on the vehicle. The tyre pressure warning light on the speedometer lights up during this time, and no current tyre pressure information is available on the displays.

Note

Information on the tyre size and type can be found on the tyre sidewall.

▷ For further information on the details on the tyre sidewall:
Please observe the chapter “INSCRIPTION ON RADIAL TYRE” on Page 297.

Note on operation

Before fitting tyres approved by Porsche with a size which is not already stored in the multi-purpose display, the missing information should be supplemented in the multi-purpose display.

▷ Consult a qualified specialist workshop. We recommend that you use a Porsche partner for this work since these are staffed with trained personnel and have the necessary parts and tools.

Warning!

Risk of accident due to excessive speed.

- ▷ Always observe the permissible maximum speed of the respective tyre.
- ▷ A sticker showing the maximum permissible speed must be placed in the driver's field of vision if the maximum permissible speed of the tyres is lower than the maximum permissible speed of the vehicle.
  Observe the country-specific laws.

The speed code letter indicates the maximum permissible speed for the tyre.

- ▷ For further information on the details on the tyre sidewall and the speed code letter:
  Please observe the chapter "INSCRIPTION ON RADIAL TYRE" on Page 297.

Setting vehicle loading and adjusting tyre pressure

The tyre pressure must be adjusted according to the vehicle load.

A distinction is made between two types of loading:

- Partial load
  up to 3 people and 21 kg of luggage
- Full load
  more than 3 people and 22 kg of luggage

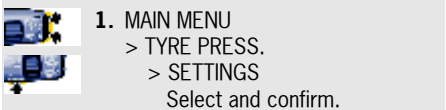

1. MAIN MENU
   > TYRE PRESS.
   > SETTINGS
   Select and confirm.

2. Select LOAD.

3. Confirm selection.
   The LOAD menu is displayed.

Select corresponding load type (e.g. FULL LOAD).

4. Confirm selection.
   The set load status is shown.

Deviations from the required pressure are shown in the sub-menu MAIN MENU > TYRE PRESSURE > SETTINGS (filling information).

- ▷ Correct the tyre pressure according to this information.

“Flat tyre” warning

The warning threshold for output of this warning message is speed-dependent.
At a speed of below 160 km/h (100 mph), this warning indicates a pressure loss of at least 0.5 bar (7 psi); at a speed of above 160 km/h (100 mph), the warning indicates a pressure loss of at least 0.4 bar (6 psi).
The message indicates the wheel in which the pressure loss has been detected.
The deviation from the required pressure is displayed for the corresponding wheel.
The tyre pressure warning light on the speedometer lights up in addition to the warning message.

▷ The warning message can be acknowledged while driving.
To do this, press the ENTER button on the wiper stalk. The tyre pressure warning light on the speedometer remains lit.
The measure display SELECTION AFTER WARNING appears only after the ignition is switched back on again.

The display shows: SELECTION AFTER WARNING

1. Stop the vehicle in a suitable place.
2. Check the indicated wheel for damage.
3. Fill the tyre or change the wheel, as appropriate.

   – Adding air
   (**Example:** If the tyre pressure display shows “–0.4 bar (6 psi)”, you must increase the tyre pressure by 0.4 bar (6 psi)).
   On vehicles without air suspension:
   Please observe the chapter “INFLATING TYRES ON VEHICLES WITHOUT LEVEL CONTROL” on Page 313.

   On vehicles with air suspension:
   Please observe the chapter “INFLATING TYRES ON VEHICLES WITH LEVEL CONTROL” on Page 315.

   or

   – Changing wheel with spare wheel or collapsible spare wheel

   For information on jacking up the vehicle:
   Please observe the chapter “RAISING VEHICLE WITH THE JACK” on Page 305.

   For information on changing a wheel:
   Please observe the chapter “CHANGING A WHEEL” on Page 308.

   or

   – Sealing with tyre sealant.

   For information on handling and filling the sealant: Please observe the chapter “TYRE SEALANT” on Page 303.
4. Switch ignition on again.
   The “Flat tyre” warning first appears again on the multi-purpose display. The display changes to SELECTION AFTER WARNING after a few seconds.
5. Select the action which has been carried out on the vehicle on the display with the rocker switch.

   – ADD AIR or

   – WHEEL CHANGE > SPARE WHEEL > Spare wheel type or

   – SEALING SET
6. Press the ENTER button.

Notes

The spare wheel and collapsible spare wheel are not equipped with wheel transmitters and are not monitored by Tyre Pressure Monitoring.

If a collapsible spare wheel or tyre sealant is used, a warning reminder appears on the multi-purpose display if the speed limit of 80 km/h (50 mph) is exceeded.

Note on operation

If you do not confirm a selection or confirm a selection without carrying out the task described for this selection, this will affect correct indication of warnings and messages.
Depending on the selection made, a corresponding message will appear when the ignition is switched on, when driving off or while driving.

For further information on warning messages on the multi-purpose display:
Please observe the chapter “OVERVIEW OF WARNING MESSAGES” on Page 151.

“Tyre pressure too low” message

This message indicates pressure loss of at least 0.3 bar (4 psi).
The message indicates the wheel in which the pressure loss has been detected. The deviation from the required pressure is displayed for the corresponding wheel.

The message appears only when the vehicle is stationary. It appears for the first time when the ignition is switched off and then each time the ignition is switched on until the tyre pressure has been corrected to the required value.

The message is shown for 10 seconds on the multi-purpose display. It can be suppressed immediately by pressing the ENTER button.

▷ Check the tyre pressure at the next opportunity and fill the tyres.

Example: If the tyre pressure display shows “–0.3 bar (4 psi)”, you must increase the tyre pressure by 0.3 bar (4 psi).

The spare wheel and collapsible spare wheel are not equipped with wheel transmitters and are not monitored by Tyre Pressure Monitoring.

Wheel change (without warning)

The settings of the multi-purpose display must be updated after changing wheels or tyres on the vehicle.
Please observe the chapter “SETTING THE TYRE TYPE AND SIZE” on Page 137.

Setting spare wheel/sealant (without warning)

If you have fitted a spare wheel or collapsible spare wheel or used tyre sealant without being requested to do so by a “Flat tyre” warning on the multi-purpose display, you must subsequently update the settings in the TYRE PRESSURE submenu.

Setting spare wheel.

1. MAIN MENU
   > TYRE PRESS.
   > SETTINGS
   > TYRES
   > SPARE WHEEL
   Select and confirm.
2. Select SPARE WHEEL.
3. Confirm selection.
   The display automatically returns to the TYRE PRESSURE sub-menu (filling information).
   The required tyre pressures are displayed here.
   Select BACK.
4. Confirm selection.
   The basic display appears.

The spare wheel is not equipped with a wheel transmitter and is not monitored by Tyre Pressure Monitoring. The tyre pressure warning light lights up on the speedometer when the ENTER button is pressed. The value "_._" is displayed in the sub-menu TYRE PRESSURE (filling information) at the position of the spare wheel.

The reminder SPARE WHEEL/SEALING SET OPERATION? appears each time the ignition is switched on. For information on spare wheel/ sealing set operation: Please observe the chapter "NOTE ON OPERATION FOR SPARE WHEEL/ SEALING SET OPERATION" on Page 142.

Note

▷ The spare wheel must be used only over short distances.
For information on handling and fitting/ removing the spare wheel: Please observe the chapter "SPARE WHEEL" on Page 317.

Setting collapsible spare wheel.

1. MAIN MENU
   > TYRE PRESS.
   > SETTINGS
   > TYRES
   > SPARE WHEEL
   Select and confirm.
2. Select COLLAP. WHEEL.
3. Confirm selection.
   The required pressure and speed limit for the collapsible spare wheel are displayed.

The collapsible spare wheel is not equipped with a wheel transmitter and is not monitored by Tyre Pressure Monitoring. The tyre pressure warning light lights up on the speedometer when the ENTER button is pressed. The value "_._" is displayed in the sub-menu TYRE PRESSURE (filling information) at the position of the collapsible spare wheel.

A warning appears on the multi-purpose display if the speed limit of 80 km/h (50 mph) is exceeded.

The reminder SPARE WHEEL/SEALING SET OPERATION? appears each time the ignition is switched on.
For information on spare wheel/sealing set operation: Please observe the chapter "NOTE ON OPERATION FOR SPARE WHEEL/SEALING SET OPERATION" on Page 142.

Note

The collapsible spare wheel must be used only over short distances.
For information on handling the collapsible spare wheel: Please observe the chapter “COLLAPSIBLE SPARE WHEEL” on Page 311.

Setting tyre sealant/sealing set

1. MAIN MENU
   > TYRE PRESS.
   > SETTINGS
   > TYRES
   > SPARE WHEEL
   Select and confirm.
2. Select SEALING SET.
3. Confirm selection.
   The display automatically returns to the TYRE PRESSURE sub-menu (filling information).

▷ Inflate tyres according to the displayed pressure differences.

A warning appears on the multi-purpose display if the speed limit of 80 km/h (50 mph) is exceeded.

The reminder SPARE WHEEL/SEALING SET OPERATION? appears each time the ignition is switched on.
For information on spare wheel/sealing set operation: Please observe the chapter “NOTE ON OPERATION FOR SPARE WHEEL/SEALING SET OPERATION” on Page 142.

Note

Use tyres repaired with sealant only over short distances.
For information on handling and filling the sealant: Please observe the chapter “TYRE SEALANT” on Page 303.

Note on operation for spare wheel/sealing set operation

Each time the ignition is switched on, the reminder SPARE WHEEL/SEALING SET OPERATION? appears for approx. 10 seconds if a spare wheel type (spare wheel, collapsible spare wheel or sealing set) has been set.

1. Select YES or NO:
   – YES if a spare wheel, collapsible spare wheel or tyre sealant is still being used.
   – NO if the spare wheel, collapsible spare wheel or tyre sealant has been removed.
2. Confirm selection.
   The selected item is then accepted. The current settings are displayed if NO is selected.

▷ Set the fitted wheel set with tyre type **and** tyre size.
Please observe the chapter “SETTING THE TYRE TYPE AND SIZE” on Page 137.

Note on operation

The reminder SPARE WHEEL/SEALING SET OPERATION? goes out automatically after approx. 10 seconds if no selection is made during this time. The original selection “YES” is then maintained.

Faults in Tyre Pressure Monitoring

In the event of faults, Tyre Pressure Monitoring cannot monitor the tyre pressure. A distinction is made between partial monitoring and inactive system.
In the case of partial monitoring, the warning light lights up on the instrument panel. **No** message is output on the multi-purpose display.
If Tyre Pressure Monitoring is not active, the warning light lights up on the instrument panel and a corresponding message is output on the multi-function display.
The warning light goes out as soon as all faults have been remedied.

Tyre Pressure Monitoring switches to partial monitoring if:

– there are up to two wheel transmitters not present or faulty (e.g. a spare wheel or collapsible spare wheel is fitted that does not have a wheel transmitter).

In the event of partial monitoring, the value "_._" is displayed in the sub-menu TYRE PRESSURE (filling information) at the position of the faulty or missing wheel transmitter.

Tyre Pressure Monitoring is not active in the following cases:

– Tyre Pressure Monitoring is faulty,

– at least three wheel transmitters for Tyre Pressure Monitoring are faulty or not present,

– temporarily after changing a wheel,

– too many wheel transmitters have been detected,

– there is external interference by other radio sources, e.g. wireless headphones,

– tyre temperatures are too high.

▷ For information on messages on the multi-purpose display:
Please observe the chapter "OVERVIEW OF WARNING MESSAGES" on Page 151.

Notes on tyre pressure

Pressure increase as the result of temperature increase

In accordance with physical principles, the tyre pressure changes as the temperature changes. The tyre pressure increases or decreases by around 0.1 bar (1.5 psi) for every 10 °C change in temperature.

Tyre pressure specifications

The tyre pressure must match the prescribed value (required pressure).

You can find information on the tyre pressure for cold tyres (20 °C):

– in the sub-menu TYRE PRESSURE (filling information):
as a required pressure for each axle if Tyre Pressure Monitoring has not yet been taught the corresponding values,

– in the front left door aperture for each wheel,

– in the Technical Data chapter in this Driver's Manual: Please observe the chapter "TYRE PRESSURES, COLD" on Page 367.

If Tyre Pressure Monitoring has been taught the corresponding values, the deviations from the required pressure are shown in the sub-menu TYRE PRESSURE (filling information) independently of the tyre temperature. The correct tyre pressure adjustment can be made for a wheel on the basis of this display information even if the tyres are warm.

Insufficient tyre filling pressure can cause tyres to overheat when driving and thus be damaged – even invisibly.
Hidden tyre damage is not eliminated by subsequently correcting the tyre pressure.

▷ For this reason, always make sure that the tyre pressure is correct.

▷ For further information on maintenance and care of tyres and wheels:
Please observe the chapter "TYRES AND WHEELS" on Page 292.

Switching off passenger compartment monitoring and inclination sensor on the multi-purpose display

The passenger compartment monitoring system and the inclination sensor (protection against towing) can be temporarily deactivated in the ALARM sub-menu.
When the doors are locked again, the passenger compartment monitoring system and inclination sensor are activated once more.

▷ Further important information concerning this topic can be found in a separate chapter: Please observe the chapter “SWITCHING OFF PASSENGER COMPARTMENT MONITORING SYSTEM AND INCLINATION SENSOR” on Page 263.

Note on operation

▷ Comfort settings can be made only when the vehicle is stationary.

Switching passenger compartment monitoring on/off

The alarm is triggered if motion is detected in the interior with the doors closed (e.g. if a window is broken in a theft).

1. MAIN MENU
> SETTINGS
> COMFORT
> ALARM
Select and confirm.

2. Select INTERIOR.

3. Confirm selection.
Monitoring is activated
Monitoring is deactivated

Switching inclination sensor on/off

The alarm is triggered if the vehicle is raised markedly at one end with the doors locked (e.g. theft with a breakdown truck).

1. MAIN MENU
> SETTINGS
> COMFORT
> ALARM
Select and confirm.

2. Select ANGLE.

3. Confirm selection.
Inclination sensor is activated
Inclination sensor is deactivated

Synchronous adjustment of door mirrors

Note on operation

Comfort settings can be made only when the vehicle is stationary.

When this function is active, the mirrors move simultaneously and in the same direction.

1. MAIN MENU
> SETTINGS
> COMFORT
> MIRRORS
Select and confirm.

2. Select SYNCH.

3. Confirm selection.
☑ SYNCHRONOUS ADJUSTMENT is activated

☐ SYNCHRONOUS ADJUSTMENT is deactivated

Changing settings for opening and locking the vehicle

Note on operation

Comfort settings can be made only when the vehicle is stationary.

You can set different variants of locking and unlocking the doors and the rear lid as well as the check-back signal when locking and unlocking the vehicle and save them on the respective remote control.

1. Using the rocker switch and the ENTER button on the wiper stalk, select MAIN MENU > SETTINGS > COMFORT > DOOR OPENING
2. Set the desired function.
3. Switch ignition off.
4. Close the driver's door.
5. Press button 🔒 on the vehicle key.

   The settings are now stored on this vehicle key.

Setting door unlocking

Door unlocking can be set on an individual basis.

1. MAIN MENU
> SETTINGS
> COMFORT
> DOOR OPENING
> DOORS
Select and confirm.

2. Select one of the three options:
   – SINGLE DOOR
   Only the driver's door is unlocked.
   The door on the access side is unlocked on vehicles equipped with Porsche Entry & Drive.
   – VEH. SIDE
   Both doors on the driver's side are unlocked.
   The doors on the access side are unlocked on vehicles equipped with Porsche Entry & Drive.
   – ALL
   All doors are unlocked.
3. Confirm selection.

Note on operation

If the unlocking button on the remote control is pressed a second time within 2 seconds, all vehicle doors are unlocked independently of the setting.

Setting door opening signal

If the signal function is active, door unlocking and locking are confirmed by the hazard warning lights flashing.

1. MAIN MENU
   > SETTINGS
   > COMFORT
   > DOOR OPENING
   > SIGNAL
   Select and confirm.
2. Select TURN SIGNALS.
3. Confirm selection.
   Signal is activated.
   Signal is deactivated.

Setting rear lid locking

When the TAILGATE function is active, rear access (rear lid, rear window and spare wheel bracket) is included in the central locking system.

Access is possible when the vehicle is stationary and unlocked.

At speeds higher than 6 km/h (4 mph), release is blocked until a door is opened with the vehicle stationary.

When the TAILGATE function is deactivated, access is only possible using button on the remote control.

1. MAIN MENU
   > SETTINGS
   > COMFORT
   > DOOR OPENING
   Select and confirm.
2. Select TAILGATE.
3. Confirm selection.
   Function is activated.
   Function is deactivated.

Setting AUTO LOCK and AUTO UNLOCK

1. MAIN MENU
   > SETTINGS
   > COMFORT
   > DOOR OPENING
   Select and confirm.
2. Select AUTO LOCK or AUTO UNLOCK.
3. Confirm selection.
   Selection is activated.
   Selection is deactivated.

AUTO LOCK and AUTO UNLOCK variants

You can set 4 different variants of automatic door locking (AUTO LOCK) and automatic door unlocking (AUTO UNLOCK).

Doors locked using AUTO LOCK can **always** be opened by pulling the inner door handle **twice** regardless of the setting for door unlocking.

Option 1:
AUTO LOCK off and AUTO UNLOCK off

The doors do not lock and unlock automatically.

Option 2:
AUTO LOCK on and AUTO UNLOCK off

Doors lock automatically when a speed of approx. 6 km/h (4 mph) is exceeded.

Option 3:
AUTO LOCK on and AUTO UNLOCK on

Doors lock automatically when a speed of approx. 6 km/h (4 mph) is exceeded.

On vehicles **without** Porsche Entry & Drive, the doors are unlocked automatically when the ignition key is withdrawn.

On vehicles equipped **with** Porsche Entry & Drive, the doors are unlocked when the ignition is switched off twice.

Option 4:
AUTO LOCK off and AUTO UNLOCK on

The doors do not lock automatically.

If the doors are locked with the central locking system button:

On vehicles **without** Porsche Entry & Drive, the doors are unlocked automatically when the ignition key is withdrawn.

On vehicles equipped **with** Porsche Entry & Drive, the doors are unlocked when the ignition is switched off twice.

Setting lighting off delay

You can set the duration the lights remain on after the vehicle is locked.

1. MAIN MENU
   > SETTINGS
   > LIGHTS
   Select and confirm.
2. Select OFF DELAY.
3. Confirm selection.
   The set off delay time is now active.
4. Select the time input field.
5. Confirm selection.
6. Set the off delay time (Coming Home function):
   The time is adjusted by pressing the rocker switch.
   Delay times of 15, 30 or 60 seconds can be set.
7. Confirm selection.

Setting the clock

1. MAIN MENU
   > SETTINGS
   > CLOCK
   Select and confirm.
2. Select xx:xx SET.
3. Confirm selection.
4. Select hours or minutes display.
5. Confirm selection.
   The desired time can now be set.
6. Set the desired time:
   The time is adjusted in hour or minute increments by pressing the rocker switch.
7. Confirm selection.

Selecting 12 h mode

8. Select 12 h-MODE.
9. Confirm selection.
   12 h mode is activated
   12 h mode is deactivated

Note on operation

There is also a button on the instrument panel to call the CLOCK menu:
Please observe the chapter “CLOCK” on Page 120.

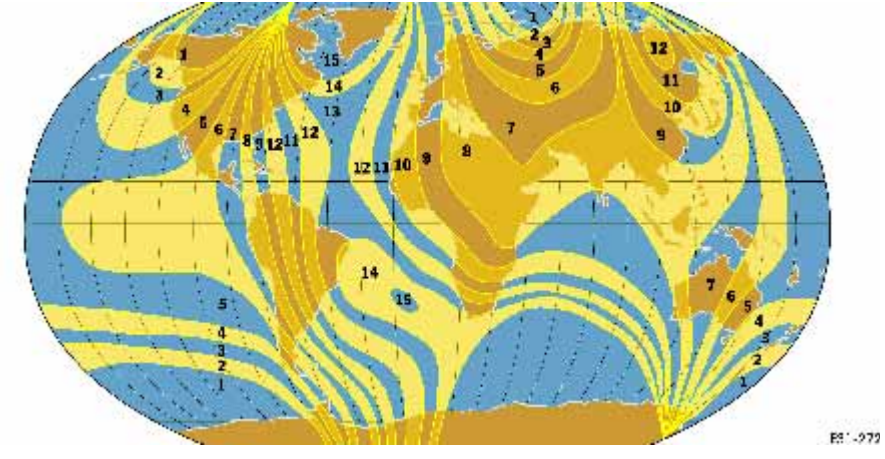

Setting compass

The display is available only for vehicles equipped with Porsche Radio CDR-23 and magnetic field sensor.

If you drive your vehicle across the magnetic field zone set on the multi-purpose display, you must enter your current zone in the COMPASS menu (see illustration).

1. MAIN MENU
> SETTINGS
> COMPASS
Select and confirm.

2. Select SET ZONE xx.

3. Confirm selection.

4. Select zone.
The setting is changed in increments of 1 by pressing the rocker switch.

5. Confirm selection.

Calibrating compass

In rare cases, external disturbances may necessitate calibration of the compass. The warning message “CAL.” then appears on the multi-purpose display.

▷ To calibrate the compass, follow the displayed instruction DRIVE IN A FULL CIRCLE.

The display returns to the main menu after successful calibration.

Changing language for displays

1. MAIN MENU
   > SETTINGS
   > LANGUAGE
   Select and confirm.
2. Select the desired language.
3. Confirm selection.

Note

Changing the language will affect the entire multi-purpose display.

Changing units for displays

1. MAIN MENU
   > SETTINGS
   > UNITS
   Select and confirm.
2. Select the desired category (e.g. SPEEDOMETER).
3. Confirm selection.
4. Select the desired unit (e.g. MPH).
5. Confirm selection.

Available categories and units

- Speedometer:
  km/h - km, mph - mls
- Consumption:
  l/100 km, km/l, MPG (UK), MPG (US)
- Temperature:
  °C - CELSIUS, °F - FAHRENHEIT
- Tyre pressure:
  bar, psi

Resetting display to factory settings

All settings made (Clock, Comfort, Lights, Units, Language) can be reset to the factory settings.

Note

All personal settings made up to this point will be deleted by resetting to the factory settings.

1. MAIN MENU
   > SETTINGS
   > FACTORY SET
   Select and confirm.
2. Select RESET.
3. Confirm selection.

Overview of warning messages

If a warning message appears, always refer to the corresponding chapters in this Driver's Manual.
Warning messages are issued only if all measurement preconditions are met.
Therefore, check all fluid levels regularly – in particular, always check the engine oil level after refuelling.

Light on instrument panel	Warning message on the multi-purpose display		Meaning/measures
		Steering faulty	Steering lock engaged. Consult a qualified specialist workshop.*
		Ignition lock faulty	Do not continue driving. Consult a qualified specialist workshop.*
		System fault	Consult a qualified specialist workshop.*
		Key not recognised in vehicle	Make sure that you have the remote control with you.
		Turn ignition key to the left for 2 seconds	To lock the steering, turn the ignition key to the left and hold for 2 seconds.
		Key: replace battery	Replace the remote-control battery.
		Move steering wheel	Turn the steering wheel so that the steering wheel lock can engage/disengage.
		Key not found	Make sure that you have the remote control with you.
		Move selector lever to position P	Tiptronic S: the vehicle could roll away. The ignition key can be withdrawn only in Tiptronic selector lever position **P**.
		Press brake pedal	Apply the brake when starting.
		Move selector lever to position P or N	Tiptronic S: the vehicle can be started only in position **P** or **N**.

Light on instrument panel	Warning message on the multi-purpose display		Meaning/measures
		Depress clutch	Manual transmission: depress clutch pedal when starting.
		Immobilizer active	Consult a qualified specialist workshop.*
		Check hitch	Ball head is not in its final position. Press rocker switch until the final position is reached.
		Warning Hitch	Stop at a suitable place. Do not continue driving. Ball head is not in its final position. Press rocker switch until the final position is reached.
		Check left static cornering light	Check bulb.
		Check right static cornering light	Check bulb.
		Check dynamic cornering light	Consult a qualified specialist workshop.* If the warning message appears, the high beam indicator light on the speedometer flashes additionally.
		Check dipped beam	Check bulb.
		Check trailer lights	Check bulb.
		Check direction indicators	Check bulb.
		Check high beam	Check bulb.
		Check licence plate light	Check bulb.
		Check fog lights	Check bulb.
		Check reversing lights	Check bulb.

Light on instrument panel	Warning message on the multi-purpose display		Meaning/measures
		Check front side lights	Check bulb.
		Check headlight beam adjustment	Consult a qualified specialist workshop.*
		Daytime driving lights off	Daytime driving lights switch off when the engine is shut off. Switch on lights if necessary.
		System fault headlamp	Consult a qualified specialist workshop.*
			Airbag faulty. Consult a qualified specialist workshop.*
		Seat belt	Fasten seat belt.
		Caution Flat tyre Check tyres	Tyre Pressure Monitoring detects a pressure loss of at least 0.4 bar (6 psi) or a larger leak. Stop in a suitable place and check tyres. Change wheel if necessary.
		Check spare wheel Req. pressure: 3.4 bar / 50 psi	Appears about every 6 months. Check if the pressure of the fitted spare wheel matches the required pressure manually, as it is not monitored electronically.
		Tyre pressure too low Add air	Tyre Pressure Monitoring detects a pressure loss of at least 0.3 bar (4 psi). Correct tyre pressure at the next opportunity.
		Collap. wheel/sealing set max. 80 km/h / 50 mph	Observe maximum permitted speed.
		Collap. wheel Req. pressure: 3.5 bar/51 psi Max. 80 km/h / 50 mph	Information on driving with a collapsible spare wheel after selection in spare wheel menu. Observe maximum speed of max. 80 km/h or 50 mph and required pressure of 3.5 bar or 51 psi.

Light on instrument panel	Warning message on the multi-purpose display		Meaning/measures
		System not active	Tyre Pressure Monitoring faulty. Consult a qualified specialist workshop.* Select new set of wheels in the Tyre pressure menu after changing the wheels.
		System not active Brief disturbance	External interference (e.g. wireless headphones) or excessive temperature (over 120 °C) at the wheel transmitters. Tyre Pressure Monitoring will reactivate itself automatically.
		System not active Too many wh. transmitters	Tyre Pressure Monitoring detects more than 4 wheel transmitters (e.g. winter wheels in the luggage compartment). Tyre Pressure Monitoring will reactivate itself after the additional wheel transmitters have been removed.
		No monitoring System learning	After the tyre type and size are selected in the Tyre pressure menu, Tyre Pressure Monitoring re-teaches the tyres.
		Wheel change? Make new selection	The tyre type and size of the changed tyres have not been updated for Tyre Pressure Monitoring. The display changes when the vehicle is stationary: Select corresponding tyre type **and** tyre size.
		When vehicle stops: hit selection	The message appears after driving off if the warning “Flat tyre” has been cleared but the selection on the display SELECTION AFTER WARNING has not been made properly. Make selection on the multi-purpose display when the vehicle is stationary.
		Engine temperature too high	Coolant or engine oil temperature is too high. Switch engine off and let it cool. Check coolant or engine oil level. Add more coolant or engine oil if necessary.
		Check coolant level	Switch engine off and let it cool. Check coolant level. Add coolant if necessary.

Light on instrument panel	Warning message on the multi-purpose display		Meaning/measures
		Warning Battery/generator	Stop in a suitable place and switch engine off. Do not continue driving. Have the fault remedied at a qualified specialist workshop.*
		Start engine	The battery discharges if the engine is not running and loads are switched on. Start the vehicle or switch the loads off.
		Electric load switch-off	Vehicle electrical system is overloaded. Certain loads (e.g. heated rear window, seat heating) will be switched off.
		Please refuel	
		Add washer fluid	
		Oil level monitoring Failure	Consult a qualified specialist workshop.*
		Check oil level	Check the oil level using the oil dipstick as soon as possible and add engine oil if necessary.
		Oil pressure too low	Immediately stop in a suitable place and switch engine off. Do not continue driving. Check engine oil level. Add oil if necessary. Do not continue driving if the warning light comes on even when the oil level is correct. Have the fault remedied at a qualified specialist workshop.*
		Oil pressure monitoring Failure	Consult a qualified specialist workshop.*
		Service in 3000 km/mls	Service indicator Bring the vehicle in for service no later than after the distance shown has been covered. However, it is the intervals in the “Guarantee and Maintenance” booklet that are decisive.
		Service now	Service indicator Have your vehicle serviced at a qualified specialist workshop.*

Light on instrument panel	Warning message on the multi-purpose display		Meaning/measures
		Brake pads	Have the brake pads changed immediately. Consult a qualified specialist workshop.*
		Warning Brake proportioning	Stop immediately in a suitable place. Do not continue driving. Have the fault remedied at a qualified specialist workshop.*
		ABS failure	Drive carefully. Have the fault remedied at a qualified specialist workshop.*
		PSM failure	Drive carefully. Have the fault remedied at a qualified specialist workshop.*
		Warning Brake fluid level	Stop immediately in a suitable place. Do not continue driving. Have the fault remedied at a qualified specialist workshop.*
		Parking brake	Parking brake not released.
		PSM on	Porsche Stability Management was switched on.
		PSM off	Porsche Stability Management was switched off.
		PHC unavailable	The Porsche Drive-off Assistant (manual transmission) is not available.
		Brake booster faulty	Greater brake pedal force necessary. Drive carefully to the nearest qualified specialist workshop.*
		Chassis Sport	Current setting of Porsche Active Suspension Management
		Chassis Normal	Current setting of Porsche Active Suspension Management
		Chassis Comfort	Current setting of Porsche Active Suspension Management

Light on instrument panel	Warning message on the multi-purpose display		Meaning/measures
		Chassis system faulty	Handling may be affected. Adapt your speed to the changed conditions. Have the fault remedied at a qualified specialist workshop.*
		Warning Chassis system	The side tilt of the vehicle is significantly greater when cornering. Drive carefully at an appropriate speed to the nearest qualified specialist workshop.*
		Warning Chassis system	Stop at a suitable place. Do not continue driving. Have the fault remedied at a qualified specialist workshop.*
		Chassis system faulty	Drive carefully to the nearest qualified specialist workshop.*
		Spare wheel filling	Collapsible spare wheel is being filled by level-control compressor. Do not drive off!
		Regulation switched off	Level control has been switched off (to jack up the vehicle).
		Not permissible	The prerequisites for setting the desired level have not been met.
		Pressure accumulator charging	Level control temporarily unavailable.
		Four-wheel dr. system faulty	Have the fault remedied at a qualified specialist workshop.*
		Shift not possible; speed too high	Tiptronic S: When changing between Low Range and High Range, the limit speed (off-road programme) must not be exceeded.
		Shift possible only in Neutral	Tiptronic S: The Tiptronic selector lever must be in position **N** when changing between Low Range and High Range.
		Possible only when stopped in neutral with brake	Manual transmission: The vehicle must be stationary, the brakes must be applied and the gearshift lever must be in the Neutral position when changing between Low Range and High Range.

Light on instrument panel	Warning message on the multi-purpose display		Meaning/measures
		Warning Parking lock! Apply parking brake!	Do not continue driving. Apply the parking brake. Have the fault remedied at a qualified specialist workshop.*
		Failure sport mode	Have the fault remedied at a qualified specialist workshop.*
		Sport mode only usable without reduction	Sport mode cannot be selected when the off-road driving programme (Low Range) is engaged.
		Limit exceeded	The set speed limit has been exceeded.
			Spare wheel is not locked. Danger of injury and damage. Before driving off always lock the spare wheel correctly.
			Driver's door open All unlocked doors and lids are displayed when the vehicle exceeds 3 km/h (2 mph).
			Passenger's door open All unlocked doors and lids are displayed when the vehicle exceeds 3 km/h (2 mph).
			Rear left door open All unlocked doors and lids are displayed when the vehicle exceeds 3 km/h (2 mph).
			Rear right door open All unlocked doors and lids are displayed when the vehicle exceeds 3 km/h (2 mph).
			Bonnet open All unlocked doors and lids are displayed when the vehicle exceeds 3 km/h (2 mph).

Light on instrument panel	Warning message on the multi-purpose display	Meaning/measures
		Rear lid open. All unlocked doors and lids are displayed when the vehicle exceeds 3 km/h (2 mph).
		Rear window open All unlocked doors and lids are displayed when the vehicle exceeds 3 km/h (2 mph).
	System fault	Several systems may have failed. Have the fault remedied at a qualified specialist workshop.*

* We recommend that you use a Porsche partner for this work since these are staffed with trained personnel and have the necessary parts and tools.

Mobile phones and 2-way radios

▷ Read the operating instructions of the telephone manufacturer before putting a telephone into operation.

▷ Please observe the applicable national regulations regarding telephone calls during driving.

⚠ Safety notes!

▷ For reasons of road safety, only telephone using the hands-free unit.

▷ To prevent any possible risk to health:
Use telephones or 2-way radios with integral radio antennas in the vehicle only if an external antenna is connected.

Installation of mobile communications systems (car telephone, 2-way radio, etc.) requires approval and should be performed only according to Porsche installation specifications in a specialist workshop.
The transmission power must not exceed 10 W.
The devices must possess a type approval for your vehicle and have an **„e“ symbol**.

If you should require equipment with transmission power values greater than 10 W, please consult a qualified specialist workshop for this purpose. They are familiar with the technical requirements for installing devices of this kind.

Incorrectly installed equipment or antennas as well as telephones and 2-way radios without external antenna may interfere with the vehicle electronics as a result of radio transmission.

▷ Use telephones or 2-way radios only with a connected external antenna.

Hands-free microphone

Hands-free microphones installed at the factory must be adapted to the type of telephone in use. Your Porsche partner will be pleased to advise you.

Reception quality

The reception quality of your telephone will change continuously as you drive.
Interference from buildings, terrain and the weather is unavoidable.
Comprehensibility can be adversely affected by external noise (e.g. engine and wind noise), particularly when hands-free equipment is used.

Porsche Communication Management (PCM)

▷ Refer to the separate operating instructions before putting the PCM into operation.

When put into operation for the first time, a distance of approx. 5 km (3 miles) must be driven in order for the navigation system to complete the process of fine calibration. The same applies when the tyres are changed (e.g. summer/winter tyres) or new tyres fitted. Full location accuracy is not yet achieved during the fine-calibration process.

If the vehicle has been transported (e.g. by ferry or car train), the system may take a few minutes after being switched on before it determines the current location.

Serious tyre slip (e.g. spinning wheels on snow) may result in temporarily inaccurate navigation.

When the battery has been disconnected, it may take up to 15 minutes before the navigation system is operational again.

Radio

▷ Refer to the separate radio operating instructions before putting into operation.

The reception conditions for your car radio change continuously as you drive. Interference from buildings, terrain and the weather is unavoidable. FM stereo reception is particularly susceptible to varying reception conditions. To reduce interference, you can switch the radio to mono mode or tune to a different FM stereo station.

Electronic accessories should only be installed after purchasing vehicle by a qualified specialist workshop. Accessories which have not been tested and approved by Porsche may impair radio reception.

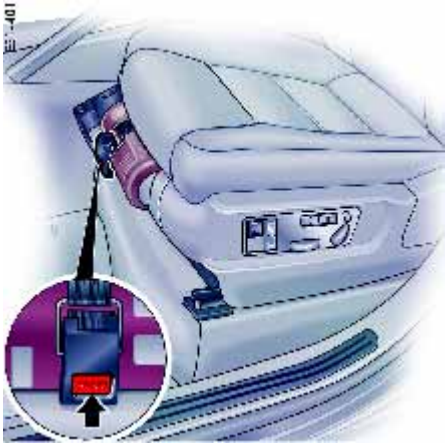

Fire extinguisher

If the vehicle is equipped with a fire extinguisher, it is mounted underneath the left or right front seat, depending on equipment level.

Fire extinguisher under the left front seat

▷ To remove the fire extinguisher in case of an emergency, hold the fire extinguisher with one hand, and press the PRESS button on the fire extinguisher holder with the other hand (**arrow**).

Fire extinguisher under the right front seat

▷ Take the fire extinguisher out of the drawer under the seat.

Notes

▷ Pay attention to the final inspection date on the fire extinguisher. If the fire extinguisher is used after its inspection interval has elapsed, it may not function properly.

▷ Follow the operating instructions for the fire extinguisher.

▷ The fire extinguisher should be checked for operation by a specialist workshop every 1-2 years.

▷ After use, have the fire extinguisher refilled.

Driving and Driving Safety

Before driving off 163
Tips for running in.....163
Ignition lock/steering lock 164
Starting and stopping the engine..... 167
Parking brake.....169
Footbrake 169
Brief overview – cruise control 171
Cruise control.....172
Manual transmission, clutch.....175
Tiptronic S 176
Selector lever positions.....177
Driving programmes for on-road
and off-road driving.....184
Power-transmission and running-gear
control systems.....190
Air suspension with level control
and height adjustment.....202
Porsche Active Suspension Management
(PASM).....206
Porsche Dynamic Chassis
Control (PDCC) 207
Off-road driving.....208
Driving systems for off-road driving..... 209
Uphill driving.....211
Airbag systems.....217

Before driving off

- ▷ Check the filling pressure, tread and condition of all tyres.
- ▷ Clean headlight lenses, rear lights, direction indicators and windows.
- ▷ Check operation of headlights, brake lights and direction indicators with the ignition switched on.
- ▷ Check operation of warning lights and indicator lights with ignition switched on and engine switched off.
- ▷ Ensure that fuel supply is adequate.
- ▷ Adjust interior and door mirrors for proper vision to the rear.
- ▷ Fasten seat belts – driver and passengers.
- ▷ Check all fluid levels regularly between service intervals as well.

Tips for running in

The following tips will be helpful in obtaining optimum performance from your new Porsche.

Despite the most modern, high-precision manufacturing methods, the “wearing in” of moving parts with each other cannot be completely avoided. This wearing-in occurs mainly in the first 3,000 km (1,865 miles).

During the first 3,000 km (1,865 miles) you should:

- ▷ Preferably take longer trips.
- ▷ Avoid frequent cold starts with short-distance driving whenever possible.
- ▷ Not participate in motor racing events, sports driving schools or similar.
- ▷ Avoid high engine speeds, especially when the engine is cold.

Oil and fuel consumption

The oil and fuel consumption may be somewhat higher than normal during the running-in period.

- ▷ The values for oil and fuel consumption are provided in the chapter Technical Data:
  Please observe the chapter “ENGINE DATA” on Page 363.
  Please observe the chapter “FUEL CONSUMPTION” on Page 364.

Bedding in new brake pads

New brake pads and brake discs have to be “bedded in”, and therefore only attain optimal friction when the vehicle has covered several hundred km or miles.
The slightly reduced braking ability must be compensated for by pressing the brake pedal harder. This also applies whenever the brake pads or brake discs are replaced.

Running in new tyres

- ▷ Please note: new tyres at first do not possess their full road-holding ability.
  The new tyres should therefore be broken in by driving at moderate speeds for the first 100 - 200 km (60 - 120 miles).

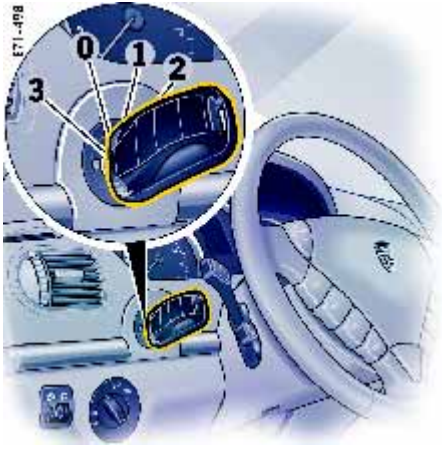

Key positions
0 - *Initial position*
1 - *Ignition on*
2 - *Start engine*
3 - *Ignition off*

Ignition lock/steering lock

The ignition lock has a total of four ignition lock positions.

Note on operation

The vehicle key rebounds to the initial position from every ignition lock position.

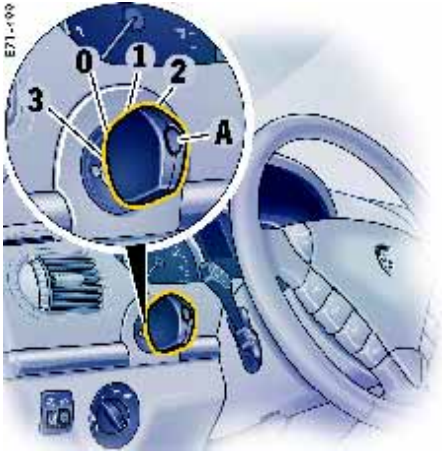

Key positions with Porsche Entry & Drive
0 - *Initial position*
1 - *Ignition on*
2 - *Start engine*
3 - *Ignition off*

For vehicles that have **Porsche Entry & Drive**, you do not need to insert the key into the ignition lock but merely keep it with you. The ignition key is replaced by a control unit in the ignition lock which **always** remains in the ignition lock, unless the vehicle is being towed.

Removing the control unit from the ignition lock

▷ Press button **A** and remove the control unit.

Ignition lock position 0

Initial position

The ignition key cannot be withdrawn when the ignition is switched on or when the engine has been started.

To withdraw the ignition key:

▷ Stop the vehicle.

▷ **On vehicles with Tiptronic S:**
Move Tiptronic selector lever to position **P**.

▷ Switch ignition off.

▷ Remove ignition key.

Note on operation

The vehicle battery discharges if the ignition key is left inserted.

▷ If the vehicle battery is dead, the key can only be pulled out of the ignition lock if the emergency operation is performed:
Please observe the chapter “EMERGENCY OPERATION – UNLOCKING THE IGNITION KEY” on Page 167.

Ignition lock position 1

Ignition on

▷ Turn ignition key to position **1**.
Ignition is switched on.

Note on operation

All electrical equipment can be switched on.
The warning lights on the instrument panel light up for a lamp check.

▷ For information on the location of the warning lights:
Please observe the chapter “INSTRUMENT PANEL” on Page 118.

If a load is not switched on for 10 minutes after switching on the ignition, the ignition must be switched on again.
Turn the ignition key to ignition lock position **3** (ignition off) first.

Ignition lock position 2

Start engine

▷ Operate footbrake.

▷ Fully depress and hold the clutch pedal **or on vehicles with Tiptronic S:**
Move Tiptronic selector lever to position **P** or **N**.

▷ Do not press the accelerator pedal.
The engine control unit will provide the correct starting mixture.

▷ Turn ignition key to ignition lock position **2**.

▷ Do not operate the starter for longer than approx. 10 seconds.
If necessary, repeat the starting procedure after a pause of approx. 10 seconds.
Turn the ignition key to ignition lock position **3** (ignition off) first.

▷ Do not warm up the engine when stationary.
Drive off immediately.
Avoid high revolutions and full throttle until the engine has reached operating temperature.

▷ If battery output is insufficient, jump leads can be used to start the engine.
For information on jump lead starting: Please observe the chapter “EXTERNAL POWER SUPPLY, JUMP LEAD STARTING” on Page 336.

Notes on operation

The first operation of the starter is ended automatically when the engine starts.
If the engine does not start, subsequent starter operations will not be ended automatically.

When the engine is started, the warning lights must go out.

Ignition lock position 3

Ignition off

▷ Turn ignition key to ignition lock position **3**.

Steering column lock

Vehicles without Porsche Entry & Drive

The steering column is **automatically locked** when the ignition key is withdrawn from the ignition lock.

The steering column is **automatically unlocked** when the ignition key is inserted into the ignition lock.

Vehicles with Porsche Entry & Drive

The steering column is **automatically locked** when the ignition is switched off and the vehicle is locked.

Manually locking the steering column on vehicles with Porsche Entry & Drive

▷ Depress the clutch on vehicles with manual transmission.

▷ Once the ignition is switched off, turn the control unit again to ignition lock position **3** and hold it there for **2 seconds**.
The steering column is locked.

The steering column is **automatically unlocked** by turning the control unit from ignition lock position **0**.

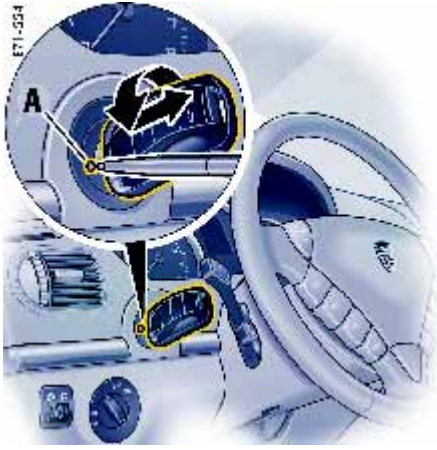

Emergency operation – unlocking the ignition key

If the vehicle battery is dead, the key can only be pulled out of the ignition lock if the emergency operation is performed.

1. Turn ignition key counter-clockwise.
2. Press a pointed object, e.g. a ballpoint pen, in the opening **A** next to the ignition lock and keep pressed.
3. Remove ignition key.

Starting and stopping the engine

The immobiliser can be deactivated and the engine started only using an authorised ignition key.

▷ For further information on the immobiliser: Please observe the chapter “IMMOBILISER” on Page 265.

⚠ Warning!

Risk of poisoning. Exhaust gas contains colourless and odourless carbon monoxide, which is toxic even in low concentrations.

▷ Never start the engine or let it run in confined spaces.

Danger of fire in the area of the hot exhaust system.

▷ Do not park or drive your vehicle where combustible materials, such as dry grass or leaves, can come into contact with the hot exhaust system.

▷ For further information on the emission control system:
Please observe the chapter “EMISSION CONTROL SYSTEM” on Page 279.

Starting the vehicle

▷ Operate footbrake.

▷ Fully depress and hold the clutch pedal.

▷ Put gearshift lever into neutral or move Tiptronic selector lever to the **P** or **N** position.

▷ Do not press the accelerator pedal.

▷ Turn ignition key to ignition lock position **2**.

▷ Do not operate the starter for longer than approx. 10 seconds. If necessary, repeat the starting procedure after a pause of approx. 10 seconds. Turn the ignition key back to the **3** position first.

The first operation of the starter is ended automatically when the engine starts.
If the engine does not start, subsequent starter operations will not be ended automatically.

▷ Do not warm up the engine when stationary. Drive off immediately. Avoid high revolutions and full throttle until the engine has reached operating temperature.

▷ If battery output is insufficient, jump leads can be used to start the engine. Vehicles with manual transmission can also be tow-started.

- For information on jump lead starting: Please observe the chapter “EXTERNAL POWER SUPPLY, JUMP LEAD STARTING” on Page 336.
- For information on tow-starting: Please observe the chapter “TOW-STARTING/ PUSH-STARTING” on Page 356.

Note on operation

To ensure a good charge condition for the battery and thus its ability to start the engine, all electrical accessories which are not required should be switched off when the ignition is switched on and when engine revolutions are low (in traffic jams, in cities or in queues).

Stopping

- Withdraw the ignition key only when the vehicle is stationary, otherwise the steering lock engages and the vehicle cannot be steered.
- Only switch the ignition off when the vehicle is stationary, as there is no steering assistance and brake boost when the engine is switched off.
- When leaving the vehicle **always** withdraw the ignition key and engage the parking brake. The control unit **always** remains in the ignition lock on vehicles that have **Porsche Entry & Drive**.

Note on operation

The vehicle battery discharges if the ignition key is left inserted.

Radiator fans

Warning!

Risk of injury. After the engine is switched off, the coolant temperature is monitored for approx. 30 minutes.
During this period, and depending on temperature, the fans may continue to run or start to run.

- The radiators and radiator fans are in the front of the vehicle. Carry out work in these areas only with the engine off and exercise extreme caution.

Parking brake

The parking brake acts on the rear wheels and serves to secure the vehicle while parked.

Applying the parking brake

▷ Press down firmly on the foot pedal.
The warning light in the instrument panel lights up.
A message will be displayed on the multi-purpose display of the instrument panel if the parking brake is not released before moving off.

▷ For information on the warning message on the multi-purpose display: Please observe the chapter “OVERVIEW OF WARNING MESSAGES” on Page 151.

Releasing the parking brake

▷ Press on the footbrake and pull handle **A** of the parking brake.
The warning light and the message disappear.

Footbrake

⚠ Safety notes!

▷ Do not obstruct the pedal travel with floor mats or other objects.

The brake booster is ready for operation only while the engine is running.
If the engine is switched off or there is a defect in the brake booster, much greater force has to be applied to the pedal when braking.

▷ Vehicles with a faulty brake must **not** be towed.
For further information on tow-starting and towing: Please observe the chapter “TOWING AND TOW-STARTING” on Page 356.

In heavy rain, while driving through water or after leaving a car wash, the braking action may be delayed and increased pressure may be required.

▷ For this reason, keep further back from the vehicle in front and “dry” the brakes by applying them at intervals. Make sure that following traffic is not affected.

After a long drive over salted or gritted roads, a coating may form on the brake discs and pads that significantly reduces friction and thus braking action.

- ▷ Therefore, clean the brake discs and pads approx. every 2 weeks with a strong jet of water. The cleaning effect of automatic car washes is insufficient.
  To prevent corrosion of the brake discs, “brake them dry” before parking the vehicle.
- ▷ Even though the brake discs consist of alloyed grey cast iron, they will unavoidably start to corrode if your car is parked for an extended period. The brakes will tend to “rub” as a result.
  The nature, extent and effects of corrosion depend on the amount of time the vehicle was parked, whether road salt or grit was spread and whether grease-dissolving agents were used in car washes.
  If the braking comfort is noticeably impaired, we recommend having the brake system checked by experts.
  Consult a qualified specialist workshop. We recommend that you use a Porsche partner for this work since these are staffed with trained personnel and have the necessary parts and tools.
- ▷ To relieve the braking system on downhill stretches, change down to a lower gear in good time to obtain engine braking.
  If engine braking is insufficient on steep stretches, operate the footbrake at intervals.
  Continuous braking overheats the brakes and reduces the braking effect.
- ▷ For information on brake fluid and checking the brake fluid level:
  Please observe the chapter “CHECKING BRAKE FLUID LEVEL AND CHANGING BRAKE FLUID” on Page 273.

Brake pads and brake discs

Wear on the brake pads and brake discs depends to a great extent on the driving style and the conditions of use and therefore cannot be expressed in actual miles on the road.

The high-performance brake system is designed for optimal braking effect at all speeds and temperatures.
Certain speeds, braking forces and ambient conditions (such as temperature and humidity) therefore might cause the brakes to squeal.

Warning message

A warning message will appear on the multi-purpose display of the instrument panel if the wear limit of the brake pads is reached.

- ▷ For information on the warning message on the multi-purpose display:
  Please observe the chapter “OVERVIEW OF WARNING MESSAGES” on Page 151.
- ▷ Have the brake pads changed immediately. Consult a qualified specialist workshop. We recommend that you use a Porsche partner for this work since these are staffed with trained personnel and have the necessary parts and tools.

Brief overview – cruise control

The cruise control maintains any selected speed between approx. 30 and 240 km/h (20 and 150 mph) without you having to use the accelerator.

This brief overview does not replace the information provided in the chapter “Cruise control”. In particular, warnings are not replaced by this brief overview.

Cruise-control stalk

What do I want to do?	What do I have to do?
Storing and maintaining speed	Pull the stalk to detent position **1**. Bring the vehicle to the desired speed. Press button **A**.
Changing stored speed	Acceleration: Press and hold stalk in position **3**. Deceleration: Press and hold stalk in position **4**.
Switching off cruise control	Move the stalk to detent position **2** or operate the footbrake.

A - *SET (store speed)*
1 - *RESUME*
(switch on/resume cruise control readiness)
2 - *OFF (Interrupt)*
3 - **+** *SPEED (accelerate)*
4 - **–** *SPEED (decelerate)*

Cruise control

The cruise control maintains any selected speed between approx. 30 and 240 km/h (20 and 150 mph) without you having to use the accelerator.
The cruise control is operated with the stalk on the steering wheel.

Warning!

Risk of accident in heavy traffic, on twisting roads or under unfavourable road conditions (e.g. wintry or wet conditions or varying road surfaces etc.).

▷ Do not use the cruise control in these conditions.

Switching cruise control readiness on

▷ Pull the stalk back to position **1** until you feel it click into place.

Cruise control readiness

The green indicator light on the tachometer now indicates readiness.

Maintaining and storing speed

▷ Bring the vehicle to the desired speed with the accelerator.

▷ Press button **A**.
The desired speed has now been stored.

Accelerating (e.g. to overtake)

Option 1

▷ Increase speed as usual with the accelerator. When you ease off the accelerator, the previously saved value is again set.

Option 2

▷ Push stalk upwards to position **3** until the desired speed is reached.
The speed reached is maintained and stored when the stalk is released.

Option 3

▷ Briefly push stalk upwards to position **3** (a maximum of 10 times).
The speed is increased by 2 km/h (1 mph) each time.

Note on operation

Cruise control operation is automatically interrupted if the speed is increased by more than approx. 25 km/h (16 mph) for longer than 20 seconds.

Decelerating

Option 1

▷ Push stalk downwards to position **4** until the desired speed is reached.
The speed reached is maintained and stored when the stalk is released.

Option 2

▷ Briefly push stalk downwards to position **4** (a maximum of 10 times).
The speed is reduced by 2 km/h (1 mph) each time.

Interrupting cruise control operation

The speed driven before the interruption remains stored in the memory and can be reactivated by operating the control stalk. Please observe the chapter “RESUMING THE STORED SPEED” on Page 174.

▷ Press stalk forward to position **2** (not engaged) **or**

▷ Operate brake or clutch pedal **or**, on vehicles with Tiptronic S, shift to selector lever position **N**.

▷ For further information on driving with Tiptronic S:
Please observe the chapter “TIPTRONIC S” on Page 176.

Cruise control operation is interrupted automatically:

– If the set vehicle speed is exceeded by more than approx. 25 km/h (16 mph) for longer than 20 seconds.

– If the actual vehicle speed falls to approx. 10 km/h (6 mph) below the set vehicle speed for longer than 5 seconds (e.g. upward slopes).

– If Porsche Stability Management (PSM) intervenes for longer than 0.2 seconds.

– If the Low Range off-road driving programme is activated.

A - *SET (store speed)*
1 - *RESUME*
(switch on/resume cruise control readiness)
2 - *OFF (Interrupt)*
3 - **+** *SPEED (accelerate)*
4 - **–** *SPEED (decelerate)*

Resuming the stored speed

▷ Pull stalk back to position **1**.

Note on operation

The stored speed should be recalled only when traffic conditions and the road surface permit.

Switching cruise control readiness off

▷ Press the stalk forward to position **2** until you feel it click into place.
The memory is cleared and the green readiness light goes out.

The memory is cleared if the ignition is switched off when the vehicle is parked.

Tip on driving

On upward or downward slopes, the set speed cannot always be maintained by the cruise control.

▷ To obtain sufficient engine braking or a better engine-speed range, you therefore have to change down to a lower gear.

Manual transmission, clutch

Warning!

Risk of accident.

▷ Do not obstruct the pedal travel with floor mats or other objects.

Floor mats of the correct size and with the appropriate fastening are available from your Porsche partner.

The positions of the gears are shown on the shift diagram on the gearshift lever.

▷ When shifting gears, always ensure that the clutch pedal is fully depressed and the gear has fully engaged.

▷ Select reverse only when vehicle is stationary.

▷ Select an appropriately low gear on upward and downward slopes.
This will ensure optimum use of engine power and engine braking.

When reverse gear is selected and the ignition is on, the reversing lights are lit.

Permitted engine speed

▷ You should change into a higher gear before the needle reaches the red mark on the tachometer, or ease off the accelerator.

If the red zone is reached during acceleration, fuel feed is interrupted.

Caution!

Risk of engine damage (overrevving) when shifting down to a lower gear.

▷ Take care not to exceed the maximum permitted engine speed when shifting down.

Tiptronic S

The Porsche Tiptronic is a six-speed transmission and features an “automatic” and a “manual” gearshift mode.

In **automatic selection mode** (selector lever position **D**), gear changing is automatic.
You can change temporarily from automatic to manual mode using the rocker switches on the steering wheel. depending on the driving programme.

In **manual selection mode** (selector lever position **M**), you change gear using the rocker switches on the steering wheel or by pushing the selector lever forward or back.

You can change between selector lever positions **D** and **M** as you wish while driving.

Note on operation

Take care not to operate the rocker switches on the steering wheel inadvertently, thereby triggering undesired gear changes.

Changing the selector lever position

The selector lever is locked when the ignition is switched off.

The selector lever can be moved from position **P** and **N** only with:

– the ignition switched on,

– the brake pedal pressed and

– the release button pressed (**arrow**).

Release button

The release button (**arrow**) on the front side of the selector lever prevents unintentional gear changes.

The release button must be pressed when shifting to position **R** or **P**.

The selector lever can no longer be operated in the event of an electrical fault.

▷ For information on emergency release of the blocked selector lever:
Please observe the chapter “SELECTOR LEVER EMERGENCY OPERATION” on Page 182.

Starting

The engine can be started only in selector lever position **P** or **N** with the brake pedal pressed.

Moving off

▷ Select the desired position for moving off (**D, M** or **R**) only when the engine is idling and whilst depressing the brake pedal.

▷ Since the vehicle creeps when in gear, do not release the brake until you want to move off.

▷ After selecting a gear, do not accelerate until you can feel that the gear is engaged.

Selector lever position

Indicator for selector lever position and engaged gear

When the engine is running, the selector lever position and engaged gear are indicated.

If there is a fault in the transmission:

– An **X** appears instead of the current gear indication on the multi-purpose display of the instrument panel.
The transmission no longer shifts.

▷ Have the fault rectified immediately.
Consult a qualified specialist workshop. We recommend that you use a Porsche partner for this work since these are staffed with trained personnel and have the necessary parts and tools.

Selector lever positions

P – Parking lock

When the selector lever is in position **P**, the drive wheels are mechanically locked.

▷ Engage parking lock only when vehicle is stationary.

▷ Engage parking lock **after** applying the parking brake and release it **before** releasing the parking brake.

▷ Always apply the parking brake before leaving the vehicle.

The ignition key can be withdrawn only in selector lever position **P**.

R – Reverse gear

▷ Select reverse only if vehicle is stationary and the brake is applied.

N – Neutral

Selector lever position **N** must be selected for towing or in car washes, for example.

▷ Select the desired position for moving off (**D, M** or **R**) only when the engine is idling and whilst depressing the brake pedal.

D – Automatic selection mode (in the on-road driving programme)

The functions of selector lever positions **D** and **M** differ in the High Range on-road driving programme and the Low Range off-road driving programme.

▷ Use selector lever position **D** for “normal” driving.
The gears are shifted automatically according to the accelerator position and speed.

Depending on the way the vehicle is driven and on the resistance (e.g. uphill), the gear-changing points are shifted towards higher or lower engine-speed ranges. The accelerator movement, driving speed, longitudinal and lateral acceleration and the road profile all have an influence on the gear-changing characteristic.
When PSM is switched off, the gear-changing points are shifted towards higher engine-speed ranges.

Unwanted upward shifts, e.g. before bends, are prevented by swiftly releasing the accelerator pedal.

Depending on lateral acceleration, upward changes on bends are not made until the engine-speed limit is reached.

Under braking, and depending on the amount of deceleration, the Tiptronic changes down earlier. For subsequent cornering, the right gear is engaged when pressure is applied to the brakes before the bend.

The bend is taken in a suitable gear. It is not necessary to change down when accelerating out of the bend.

Moving off

The vehicle moves off in 2nd gear if little throttle is used. The vehicle moves off in 1st gear when the throttle is open wider or when the engine is cold (Cayenne S only).
The vehicle generally moves off in 1st gear when PSM is switched off or when Sport mode is switched on.

Shifting gears on the steering wheel

With the rocker switches on the steering wheel, you can change temporarily from automatic selection mode **D** to manual mode **M**.

Advantages

– Shifting down before bends and on entering built-up areas.

– Shifting down on downward slopes (engine braking).

– Shifting down for brief spurts of acceleration.

– Selecting 1st or 2nd gear for moving off.

The manual selection mode remains engaged:

– for cornering (depending on the lateral acceleration) and overrunning,

– when the vehicle is stationary (e.g. at a junction).

The system leaves manual selection mode again:

– automatically after around 8 seconds (unless vehicle is cornering, overrunning or stationary),

– if you depress the accelerator to kickdown.

Temporary change-down

Precondition

– Speed is higher than approx. 54 km/h (33 mph).

▷ Depress accelerator quickly.
Tiptronic temporarily changes to the sportiest gear-changing map, i.e. to the highest possible gear-changing points. Correspondingly, the transmission shifts down immediately by one, two or three gears.

Ending the function

▷ Release the accelerator markedly (by approx. 25 %).

Kickdown

The kickdown function is active in selector lever position **D**.

▷ For optimum acceleration, e.g. when overtaking, depress the accelerator pedal beyond the full-throttle point (kickdown).

The transmission shifts down depending on the speed of travel and engine speed.
Upward shifts occur at the highest possible engine speeds.
These gear-changing speeds remain active until the accelerator is released to approx. 80 % of the full-throttle position.

D – Automatic selection mode (in the off-road driving programme with reduction)

The functions of selector lever positions **D** and **M** differ in the High Range on-road driving programme and the Low Range off-road driving programme.

▷ Use selector lever position **D** for “normal” driving.
The gears are shifted automatically according to the accelerator position and speed.

The gear-changing points are chosen to achieve the best possible vehicle control on difficult terrain.

Depending on the route profile, the gear-changing points are shifted towards higher or lower engine-speed ranges. On steep downhill stretches, upward shifts are prevented until medium engine speeds are reached (at least 2,500 rpm).

When the vehicle is overrunning, an automatic upshift does not occur when the engine speed limit is reached.

Moving off

The vehicle moves off in 1st gear.

Shifting gears on the steering wheel

With the rocker switches on the steering wheel, you can change temporarily from automatic selection mode **D** to manual mode **M**.

Advantages

– Shifting down on downward slopes (engine braking).

– Shifting down for brief spurts of acceleration.

– Selecting 1st, 2nd or 3rd gear for moving off.

The manual selection mode remains engaged:

– for overrunning,

– depending on lateral acceleration,

– when the vehicle is stationary (e.g. at a junction).

The system leaves manual selection mode again:

– automatically after around 8 seconds (unless vehicle is subject to high lateral acceleration, overrunning or is stationary),

– if you depress the accelerator to kickdown.

Kickdown

The kickdown function is active in selector lever position **D**.

▷ For optimum acceleration, e.g. when overtaking, depress the accelerator pedal beyond the full-throttle point (kickdown).

The transmission shifts down depending on the speed of travel and engine speed.
Upward shifts occur at the highest possible engine speeds.
These gear-changing speeds remain active until the accelerator is released to approx. 80 % of the full-throttle position.

Tip on driving

Unlike in the on-road driving programme, an automatic upshift is **not** performed in manual selection mode **M** when the engine-speed limit is reached.

M – Manual selection mode (in the on-road driving programme)

The functions of selector lever positions **D** and **M** differ in the High Range on-road driving programme and the Low Range off-road driving programme.

The currently selected gear is retained if you change from **D** to **M**.

If you change from **M** to **D**, the gear-changing map suitable for your current driving style is selected and the appropriate gear is selected.

Tip on driving

The kickdown function is not active in selector lever position **M**.

The kickdown function cannot be used to downshift in selector lever position **M**. When accelerating (e.g. to overtake), you must therefore change down manually.

Shifting up

▷ Press upper part (+) of a rocker switch **A or**

▷ Push selector lever **B** forward in the M gate.

Shifting down

▷ Press lower part (–) of a rocker switch **A or**

▷ Push selector lever **B** back in the M gate.

Depending on driving speed and engine speed, you can shift up or down at any time. However, gear changes which would exceed the upper or lower engine-speed limit are not executed by the control unit.

You can change down two gears by quickly pressing the rocker switches **A** or selector lever **B** twice.

If PSM is active and the engine-speed limit is reached, an automatic upward shift is performed or, just before idling speed is reached, a downward shift is performed.

▷ Select an appropriately low gear on upward and downward slopes.
This will ensure optimum use of engine power and engine braking.

If manual mode fails, the control electronics switches to automatic mode.
In this event, the instrument panel will display selector lever position **D**.

▷ Have the fault remedied. Consult a qualified specialist workshop. We recommend that you use a Porsche partner for this work since these are staffed with trained personnel and have the necessary parts and tools.

M - Manual selection mode (in the off-road driving programme)

The functions of selector lever positions **D** and **M** differ in the High Range on-road driving programme and the Low Range off-road driving programme.

The currently selected gear is retained if you change from **D** to **M**.

If you change from **M** to **D**, the gear-changing map suitable for your current driving style is selected and the appropriate gear is selected.

Tip on driving

The kickdown function is **not** active in selector lever position **M**. Unlike in the on-road driving programme, an automatic upshift is **not** performed when the engine-speed limit is reached.

Shifting up

- ▷ Press upper part (+) of a rocker switch **A or**
- ▷ Push selector lever **B** forward in the M gate.

Shifting down

- ▷ Press lower part (–) of a rocker switch **A or**
- ▷ Push selector lever **B** back in the M gate.

Depending on driving speed and engine speed, you can shift up or down at any time. However, gear changes which would exceed the upper or lower engine-speed limit are not executed by the control unit.

You can change down two gears by quickly pressing the rocker switches **A** or selector lever **B** twice.

The gear is changed down automatically just before idle speed is reached.

- ▷ Select an appropriately low gear on upward and downward slopes.
  This will ensure optimum use of engine power and engine braking.

If manual mode fails, the control electronics switches to automatic mode. In this event, the instrument panel will display selector lever position **D**.

- ▷ Have the fault remedied. Consult a qualified specialist workshop. We recommend that you use a Porsche partner for this work since these are staffed with trained personnel and have the necessary parts and tools.

Stopping

- ▷ For a brief stop (e.g. at a traffic light), leave the selector lever in drive position and hold the vehicle with the brake pedal.
- ▷ Do not hold the car on a slope using the accelerator. Use the brake pedal or the parking brake instead.
- ▷ Before leaving the vehicle, always apply the parking brake and move the selector lever to position **P**.

Tip on driving

In selector lever positions **D** and **M**, the hillholder function makes it easier to move off from a standstill on an upward slope when the engine is running. The driver does not have to apply the brake.

- ▷ For information on using the hillholder function: Please observe the chapter “HILLHOLDER – MOVING-OFF ASSISTANT ON VEHICLES WITH TIPTRONIC S” on Page 199.

Parking

▷ Go easy on the accelerator.

▷ When parking or manoeuvring in a small space, control the speed by careful use of the footbrake.

Driving in winter

In wintry road conditions it is advisable to take steep inclines in manual mode **M**. This prevents the occurrence of gear changes that could cause wheelspin.

Reduced driving programme

If there is a fault in the transmission:

– An **X** appears instead of the current gear indication on the multi-purpose display of the instrument panel.
The transmission no longer shifts.

▷ Have the fault remedied. Consult a qualified specialist workshop. We recommend that you use a Porsche partner for this work since these are staffed with trained personnel and have the necessary parts and tools.

⚠ Warning!

Risk of accident and damage.
Reverse-lock monitoring does not function in the reduced driving programme.

▷ Do not select position **R** while driving.

Tip on driving

3rd or 5th gear in selector position **D** and reverse gear **R** are now available and will allow you to reach the nearest qualified workshop.

▷ Consult a qualified specialist workshop. We recommend that you use a Porsche partner for this work since these are staffed with trained personnel and have the necessary parts and tools.

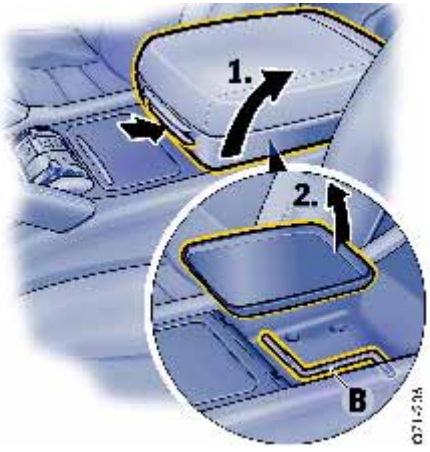

Selector lever emergency operation

In the event of an electrical fault, the selector lever lock in position **P** can be manually released (e.g. for towing the vehicle).

1. Fold up armrest.
2. Remove key **B** from the lower oddments tray (underneath the rubber mat) in the centre console.

3. Undo screws **A** with key **B**.
4. Remove trim mounting **F**.
5. Lift trim **C** at rear and carefully pull it off.

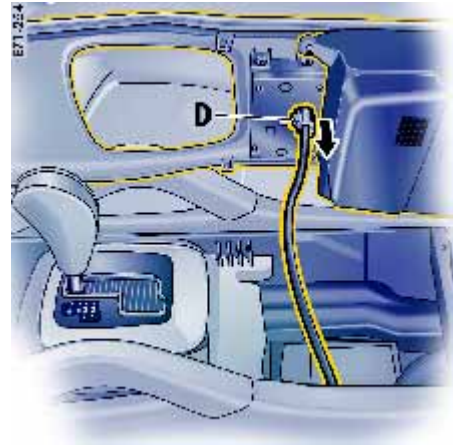

6. Unplug plug connection **D**.

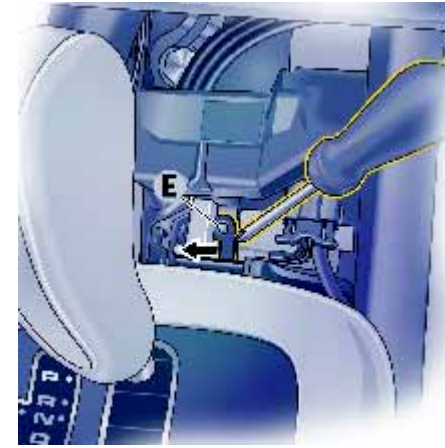

7. Press foam aside.
8. Press locking lever **E** aside (to the left) using a suitable object.
9. Move selector lever to position **N**.
10. Reassemble in reverse order.

Driving programmes for on-road and off-road driving

Two different driving programmes with special power-transmission and running-gear control systems (such as ABS, off-road ABS and PSM, etc.) are provided in your Porsche with the aim of realising the best possible driving dynamics combined with maximum safety on the road.

All control systems meet these requirements for both off-road and on-road driving.

With rocker switch **A**, you can easily select the appropriate driving programme to suit the special requirements for the respective terrain.

Low Range off-road programme (with reduction)

When the Low Range off-road driving programme is active, the power transmission and running-gear control systems are automatically adapted to the requirements for off-road driving.

High Range on-road driving programme (without reduction)

When the High Range on-road driving programme is active, the power transmission and running-gear control systems are automatically adapted to the requirements for on-road driving.

Operation and use

The rocker switch **A** is located in the centre console of the vehicle. It features a multi-step function and can be operated in both directions.

Each time the rocker switch is pushed forward, the vehicle becomes one step more suitable for off-road driving. This is realised by changing from the on-road driving programme to the off-road programme or by engaging the differential locks in stages.
The number of differential locks that can be engaged in the Low Range driving programme depends on the equipment of your vehicle.

Each time the rocker switch is pushed back, the vehicle becomes one step more suitable for on-road driving.

Once the driving programme has been selected, the rocker switch springs back to home position.

Notes on operation

If the Low Range indicator light next to the rocker switch flashes rapidly **after the ignition is switched on**, there is a fault in the shifting system.

▷ Have the vehicle checked immediately. Consult a qualified specialist workshop. We recommend that you use a Porsche partner for this work since these are staffed with trained personnel and have the necessary parts and tools.

Low Range indicator light

If the Low Range indicator light next to the rocker switch flashes when you attempt to operate rocker switch **A**, then at least one condition for shifting has not been met:

Vehicles with manual transmission

– Vehicle is not stationary.

– Brake is not pressed.

– Gearshift lever in not in neutral.

Vehicles with Tiptronic S

– Vehicle has exceeded or gone below the limit speed.

– Tiptronic selector lever is not in position **N**.

A - *Rocker switch*
B - *Low Range is engaged*

Changing from on-road driving programme to off-road driving programme

Vehicles with manual transmission

▷ Stop the vehicle.

▷ Apply the brake.

▷ Put the gearshift lever in neutral.

▷ Push rocker switch **A** forward until activation of the off-road driving programme is indicated on the multi-purpose display of the instrument panel and by illumination of light-emitting diode **B**.
The Low Range indicator light on the instrument panel and the light-emitting diode **B** next to the rocker switch **flash several times** during the shifting process.
Low Range is now engaged.

Caution!

Risk of engine damage (overrevving). In the Low Range programme, the gear-shifting points are shifted towards lower engine-speed ranges.

▷ Shift early to prevent overrevving the engine.

Vehicles with Tiptronic S

- ▷ Reduce speed to below 15 km/h (9 mph) or stop vehicle.
- ▷ Move Tiptronic selector lever to position **N**.
- ▷ Push rocker switch **A** forward until activation of the off-road driving programme is indicated on the multi-purpose display of the instrument panel and by illumination of light-emitting diode **B**.
  The Low Range indicator light on the instrument panel and the light-emitting diode **B** next to the rocker switch **flash several times** during the shifting process.
  Low Range is now engaged.

⚠ Danger!

The Tiptronic selector lever is blocked during shifting. Shifting when driving uphill can cause the vehicle to stand still or even roll backwards as long as the shift operation has not been completed. When driving downhill, the vehicle can accelerate unintentionally while shifting.

- ▷ Increased brake readiness is required.

A - *Rocker switch*
B - *Low Range is engaged*
C - *Centre differential lock is fully engaged*

Fully engaging the centre differential lock in Low Range

Tip on driving

When the centre differential lock is fully engaged, there is no longer any speed difference between the front and rear axles. If, for example, both wheels on the front axle lose traction on an icy road or soft surface, the rigid drive-through function will permit the vehicle to continue moving nevertheless.

- ▷ Push rocker switch **A** forwards in stages until engagement of the centre differential lock is indicated on the multi-purpose display of the instrument panel and by illumination of the two light-emitting diodes **B** and **C**.
  The centre differential lock is changed over to fully engaged state by the automatic control system.

A - *Rocker switch*
B - *Low Range is engaged*
C - *Centre differential lock is fully engaged*
D - *Rear differential lock is fully engaged*

Fully engaging the rear differential lock in Low Range

Tip on driving

When the rear differential lock is fully engaged, there is no longer any speed difference between the two rear wheels. If, for example, one drive wheel on the rear axle loses traction on an icy road or soft surface, the rigid drive-through function will permit the vehicle to continue moving nevertheless.

▷ Push rocker switch **A** forwards in stages until engagement of the rear differential lock is indicated on the multi-purpose display of the instrument panel and by illumination of the three light-emitting diodes **B, C** and **D**.
The centre and rear differential locks are changed over to fully engaged state by the automatic control system.

Note on operation

The rear differential lock can be engaged only while the engine is running.

Changing from off-road driving programme to on-road driving programme

Vehicles with manual transmission

- ▷ Stop the vehicle.
- ▷ Apply the brake.
- ▷ Put the gearshift lever in neutral.
- ▷ Pull rocker switch **A** back in stages until light-emitting diodes **B, C and, where appropriate, D** are out.
  The Low Range indicator light on the instrument panel and the light-emitting diode **B** next to the rocker switch **flash several times** during the shifting process.
  High Range is now engaged.

Vehicles with Tiptronic S

- ▷ Reduce speed to below 30 km/h (19 mph) or stop vehicle.
- ▷ Move Tiptronic selector lever to position **N**.
- ▷ Pull rocker switch **A** back in stages until light-emitting diodes **B, C and, where appropriate, D** are out.
  The Low Range indicator light on the instrument panel and the light-emitting diode **B** next to the rocker switch **flash several times** during the shifting process.
  High Range is now engaged.

⚠ Danger!

The Tiptronic selector lever is blocked during shifting. Shifting when driving uphill can cause the vehicle to stand still or even roll backwards as long as the shift operation has not been completed. When driving downhill, the vehicle can accelerate unintentionally while shifting.

- ▷ Increased brake readiness is required.

Sport Mode

Function

The sports exhaust system is switched on and a sportier car set-up is obtained when Sport mode is switched on.
Interventions by the Porsche control systems are intentionally shifted towards greater agility and driving performance.

- – PASM (Porsche Active Suspension Management) is automatically changed to Sport mode, resulting in a stiffer suspension setup.

– PDCC (Porsche Dynamic Chassis Control) is automatically set to Sport mode, and this further reduces the roll tendency of the vehicle.

– The air suspension automatically changes to the low level setting.

– The Tiptronic S transmission changes to a sportier shift strategy.
The gear-changing points are shifted to higher speed ranges. Upward shifts are initiated later, and deceleration shifts are performed earlier. The vehicle moves off in 1st gear.

– The electronic accelerator pedal reacts sooner, and the engine is more responsive to throttle inputs.

– Sporty engine tuning is activated.

▷ For further information:
Please observe the chapter “PORSCHE ACTIVE SUSPENSION MANAGEMENT (PASM)” on Page 206.
Please observe the chapter “PORSCHE DYNAMIC CHASSIS CONTROL (PDCC)” on Page 207.

Switching Sport mode on and off

Sport mode can be activated when the ignition is switched on and when the on-road driving programme High Range (without reduction) is selected.

▷ Press SPORT button **E** in the centre console. When Sport mode is switched on, the light-emitting diode **F** in the SPORT button is lit.

When Sport mode is switched on, the logo SPORT appears on the multi-purpose display.

After the ignition is switched off, Sport mode is automatically reset to Normal mode.

Warning messages

A warning appears on the multi-purpose display of the instrument panel in the event of a fault.

▷ For information on warning messages on the multi-purpose display:
Please observe the chapter “OVERVIEW OF WARNING MESSAGES” on Page 151.

Vehicles with air suspension

If you wish to use the characteristics of Sport mode and the sports exhaust system, but would like a more comfortable running-gear setup, you can:

– switch PASM and PDCC separately to Normal or Comfort mode and/or

– raise the ride height of the vehicle.

▷ Press the corresponding PASM button in the centre console. The light-emitting diode in the button of the selected running-gear setup lights up.
In addition, the selected running-gear setup is shown on the multi-purpose display of the instrument panel for approx. 12 seconds.
Please observe the chapter “PORSCHE ACTIVE SUSPENSION MANAGEMENT (PASM)” on Page 206.
Please observe the chapter “PORSCHE DYNAMIC CHASSIS CONTROL (PDCC)” on Page 207.

▷ Press the rocker switch in the centre console forward. The corresponding light-emitting diode next to the rocker switch lights up continuously after the adjustment process. The level change is also indicated on the multi-purpose display of the instrument panel.
Please observe the chapter “AIR SUSPENSION WITH LEVEL CONTROL AND HEIGHT ADJUSTMENT” on Page 202.

Power-transmission and running-gear control systems

A complex network of all control systems acting in power transmission and in the running gear has been realised in your Porsche.
All control systems are networked with the aim of combining the best possible driving performance with maximum safety.
The following systems are involved:

System/designation	Scope
PTM Porsche Traction Management	– Full-time all-wheel drive – Electronically controlled centre differential lock – Automatic brake differential (ABD) – Traction control system (TCS) – Reduction gear/Low Range
PTM Plus Porsche Traction Management	In addition to the PTM features, PTM Plus also includes: – Electronically controlled rear differential lock
PSM Porsche Stability Management	– Stability management system – Anti-lock brake system (ABS) – Brake system prefilling – Brake booster – Traction control system (TCS) – Automatic brake differential (ABD) – Engine drag torque control (MSR)
Air suspension with level control and height adjustment	– Full load bearing air spring struts with integral shock absorbers – Air supply system with pressure accumulator
PASM Porsche Active Suspension Management	– Shock absorber system with adaptive, continuous shock absorber control
PDCC Porsche Dynamic Chassis Control	– Active chassis control system to stabilise roll tendency of vehicle body when driving

Porsche Traction Management (PTM)

Porsche Traction Management is a full-time all-wheel control system designed to influence the longitudinal and lateral dynamics. It is closely linked with the Porsche Stability Management (PSM) control system.

PTM ensures the best possible power distribution to the four driven wheels at the front and rear axles. The system realises this optimal traction by intervening in the lock control function of the transfer box and rear differential. PTM is active at all times and, unlike PSM, cannot be switched off.

Advantages of PTM

- Obvious improvement in traction, driving stability and steering ability of the vehicle.
- Vehicle is more manageable when driven at its performance limits.
- Improved straight-ahead tracking and stability.
- The above features allow for a sportier setup of the running gear.
- TCS and ABD further enhance traction for all wheels.

⚠ Safety notes!

In spite of the advantages of PTM, it is still the driver's responsibility to adapt his driving style and manoeuvres in line with road and weather conditions, as well as the traffic situation.

The increased safety that is provided should not induce you to take greater risks with your safety. The limits set by the physics of driving cannot be overcome, even with PTM.
Risks of accident due to inappropriate speed cannot be reduced by PTM.

Full-time all-wheel drive

With the four-wheel drive, the drive power is variably distributed to the front and rear wheels. Power distribution and wheel speed compensation between the front and rear axles is realised with a transfer box.

Distribution of the drive power depends on the wheel speed difference between the two axles. The transfer box always controls power distribution in such a way that optimal propulsion is achieved, even on an unfavourable road surface.

Full-time all-wheel drive ensures optimum handling and a high level of driving stability.

⚠ Safety notes!

In spite of the advantages of four-wheel drive, it is still the driver's responsibility to adapt his driving style and manoeuvres in line with road and weather conditions, as well as the traffic situation.

The increased safety that is provided should not induce you to take greater risks with your safety. The limits set by the physics of driving cannot be overcome, even with four-wheel drive.

Risks of accident due to inappropriate speed cannot be reduced by four-wheel drive.

Automatic brake differential (ABD)

The ABD system controls the front and rear axles separately. If one wheel of an axle starts to spin, it is braked so that the other wheel on the same axle can be driven.

ABD recognises different driving states, and it features control strategies adapted to these states. In situations in which little propulsive power is required, such as when the vehicle moves off on a level gravel surface, traction control already becomes active at low engine speeds. If a large amount of propulsive power is required, such as when moving off on an uphill slope or for rapid acceleration, the ABD system is adapted accordingly.
A special off-road driving programme is used in Low Range mode.

Traction control system (TCS)

The traction control system prevents the wheels from spinning by adjusting the engine power, thereby ensuring good lane-holding ability and stable handling.

Porsche Stability Management (PSM)

PSM is an active control system for stabilisation of the vehicle during extreme driving manoeuvres. It is networked with the Porsche Traction Management (PTM) system.

PSM makes use of both the ABD and TCS systems, as well as the known functions of the anti-lock brake system (ABS) and engine drag torque control system (MSR).

⚠ Safety notes!

In spite of the advantages of PSM, it is still the driver's responsibility to adapt his driving style and manoeuvres in line with road and weather conditions, as well as the traffic situation.

The increased safety that is provided should not induce you to take greater risks with your safety. The limits set by the physics of driving cannot be overcome, even with PSM.
Risks of accident due to inappropriate speed cannot be reduced by PSM.

Advantages of PSM

- Best possible traction and lane-holding ability in all driving situations – even on road surfaces with varying friction.
- The system compensates for undesired vehicle reactions (Ferraria effect) when the driver releases the accelerator pedal or brakes on bends. This compensation functions up to the maximum lateral acceleration.
- PSM actively stabilises the vehicle as required during dynamic driving manoeuvres (e.g. rapid steering movements, during lane changes or on alternating bends).
- Improved braking stability on bends and on different or varying road surfaces.
- Improved brake functioning and reduced stopping distance in the event of emergency braking.

Readiness for operation

PSM is switched on automatically every time you start the engine.

Function

Sensors at the wheels, brakes, steering system and engine continuously measure:

- Speed
- Direction of travel (steering angle)
- Lateral acceleration
- Longitudinal acceleration
- Rate of turn about the vertical axis

PSM uses these values to determine the direction of travel desired by the driver.
PSM intervenes and corrects the course if the actual direction of motion deviates from the desired course (steering-wheel position):
It brakes individual wheels as needed. If necessary, PSM additionally influences the engine power or the gear-changing characteristic of Tiptronic in order to stabilise the vehicle.

The events below inform the driver of PSM control operations and warn him to adapt his driving style to the road conditions:

- The multi-functional information light on the instrument panel flashes.
- Light in the PSM Off button flashes.
- Hydraulic noises can be heard.
- The vehicle decelerates and steering-wheel forces are altered as PSM controls the brakes.
- Reduced engine power.
- The brake pedal vibrates and its position is changed during braking.
  In order to achieve full vehicle deceleration, foot pressure must be increased after the brake pedal has begun vibrating.

Examples of PSM control operations

- If the front wheels of the vehicle drift on a bend, the engine power is reduced and the rear wheel on the inside of the bend is braked if necessary.
- If the rear of the vehicle swings out on a bend, the front wheel on the outside of the bend is braked.
- Brake system prefilling:
  The brake system is prepared for possible subsequent emergency braking if the accelerator pedal is released suddenly and quickly. The brake system is prefilled and the brake pads are already applied gently to the brake discs.
- Brake booster:
  In the event of an emergency braking operation where the pedal force is insufficient, a brake booster provides the braking pressure necessary for maximum deceleration at all 4 wheels.

Combined operation of PSM and PTM/PTM Plus

In order to ensure optimum stabilisation of the vehicle, the centre differential lock (PTM) and where appropriate also the rear differential lock (PTM Plus) are also opened when PSM interventions occur.

Tip on driving

When PSM is switched off, wheel-specific brake interventions and the traction control system (TCS) are also inactive.
The automatic brake differential (ABD) remains on.

Off-road PSM
(PSM in Low Range off-road programme)

When the Low Range off-road driving programme is active, an off-road PSM specially matched to off-road driving is activated to enhance traction.

In order to improve driveability on difficult terrain, the response of the off-road PSM is less sensitive in the low speed range when the vehicle is operated in the Low Range off-road driving programme.

If the brakes are highly stressed, the automatic brake differential (ABD) switches itself off to protect the brakes. It remains deactivated until the brake system has cooled sufficiently again.

Engine drag torque control (MSR)

In conditions of excessive slip, the engine drag torque control system prevents all driven wheels locking up when the vehicle is overrunning. This is also the case for downshifts on a slippery road.

Switching off PSM

▷ Press PSM OFF button **A**.
PSM is switched off after a short delay.
The light-emitting diode in the button is lit up.
When PSM is switched off, the multi-functional PSM light on the instrument panel lights up **and** a message appears on the multi-purpose display of the instrument panel.

During braking, the vehicle is stabilised even when PSM is switched off.

One-sided spinning of the wheels is prevented, even with PSM switched off.

PSM should always be switched on during "normal" driving.
However, it may be advantageous to switch off PSM temporarily in exceptional situations:

– On a loose surface and in deep snow,

– When "rocking the vehicle free" and

– When using snow chains.

Tiptronic vehicles: When PSM is switched off, the slip monitoring function of Tiptronic is also deactivated.

Multifunctional PSM light

- The multi-functional light on the instrument panel lights up for a lamp check when the ignition is switched on.
- The light indicates a control operation, including when PSM is switched off (brake control in the event of one-sided wheel spin).
- In conjunction with the multi-purpose display on the instrument panel, the light indicates that PSM is switched off.
- Faults are displayed by the light in conjunction with the multi-purpose display of the instrument panel.
  PSM is out of order.

▷ Consult a qualified specialist workshop. We recommend that you use a Porsche partner for this work since these are staffed with trained personnel and have the necessary parts and tools.

Collapsible spare wheel

▷ Never switch off PSM when driving with a collapsible spare wheel.

Towing

▷ For information on towing:
Please observe the chapter “TOWING AND TOW-STARTING” on Page 356.

Tip on driving

When PSM is switched off, wheel-specific brake interventions and the traction control system (TCS) are also inactive.
The automatic brake differential (ABD) remains on.

Switching PSM back on

▷ Press PSM OFF button **A**.
PSM is switched on after a short delay.
The light-emitting diode in the button and the multi-functional PSM light on the instrument panel go out.
A message is shown on the multi-purpose display of the instrument panel.

Vehicle-trailer combination stabilisation

(depending on country-specific vehicle equipment)

Vehicle-trailer combination stabilisation is an assistance function for driving with trailers as part of Porsche Stability Management (PSM).

Vehicle-trailer combination stabilisation detects snaking of the vehicle-trailer combination.
If such critical driving situations are detected, the vehicle-trailer combination stabilisation function brakes the vehicle until the combination is stabilised.

The vehicle-trailer combination cannot be stabilised in all driving situations. Slippery roads or a loose surface can cause the trailer to jackknife, for example. Trailers with a high centre of gravity can tip over.

▷ Steer carefully during the control process.

▷ For further information on driving with a trailer: Please observe the chapter "DRIVING WITH A TRAILER" on Page 244.

⚠ Danger!

Risk of accident.
In spite of the advantages of vehicle-trailer combination stabilisation, it is still the driver's responsibility to adapt his driving style and manoeuvres in line with road and weather conditions, as well as the traffic situation.

The increased safety that is provided should not induce you to take greater risks with your safety. The limits set by the physics of driving cannot be overcome, even with vehicle-trailer combination stabilisation.
Risks of accident due to inappropriate speed cannot be reduced by vehicle-trailer combination stabilisation.

Risk of accident.
The vehicle-trailer combination cannot be stabilised if the trailer jackknifes (e.g. on slippery roads or on loose surfaces).

▷ Adjust your driving style to the road conditions.

Risk of accident.
Trailers with a high centre of gravity can tip over.

▷ Adjust your driving style.

Risk of accident.
Excessive speed under the prevailing driving conditions can lead to loss of control of the vehicle-trailer combination.

▷ When using the vehicle with a trailer, drive at a speed appropriate to road and traffic conditions, as well as adjusted to the loading situation.

▷ Never exceed a speed of **80 km/h (50 mph)**.

Preconditions

- Trailer plug is plugged in,
- The trailer is in perfect technical condition.

Readiness for operation

- Vehicle-trailer combination stabilisation is active when PSM is switched on.

▷ Observe country-specific laws for driving with trailers.

Notes on operation

- Vehicle-trailer combination stabilisation is switched off when PSM is switched off.
- When the brake pedal is pressed, vehicle-trailer combination stabilisation is active even if PSM is switched off.
- On vehicles with electrically folding trailer hitch, the hitch must be fully extended and in its end position.

ABS brake system (anti-lock brake system)

⚠ Safety notes!

In spite of the advantages of ABS, it is still the driver's responsibility to adapt his driving style and manoeuvres in line with road and weather conditions, as well as the traffic situation.

The increased safety that is provided should not induce you to take greater risks with your safety. The limits set by the physics of driving cannot be overcome, even with ABS.
Risks of accident due to inappropriate speed cannot be reduced by ABS.

ABS ensures

- **Full steering control**
  The vehicle remains steerable
- **Good driving stability**
  No skidding due to locked wheels
- **Optimum braking distance**
  Shorter stopping distances in most cases
- **Prevention of wheel locking**
  No flat spots on the tyres

Function

The decisive advantage of ABS is in the driving stability and manoeuvrability of the vehicle in hazardous situations.

The ABS prevents locking of the wheels during full braking, on almost all road surfaces, until shortly before the vehicle stops.

The ABS begins to control the braking process as soon as a wheel shows a tendency to lock.
This controlled braking process is comparable with extremely rapid cadence braking.
The pulsating brake pedal and a "juddering noise" warn the driver to adapt his driving speed to the road conditions.

▷ If full braking is necessary, fully depress the brake pedal during the whole braking operation, even though the pedal is pulsating. Do not reduce the braking pressure.

Warning light

If the ABS warning lights light up on the instrument panel and on the multi-purpose display of the instrument panel while the engine is running, ABS has switched off because of a fault.
In this case, the braking system will operate **without lock prevention,** as in vehicles without ABS.

▷ Adapt your driving style to the changed braking behaviour.
The ABS system must be checked immediately in order to prevent the occurrence of further faults with effects which cannot be defined. Consult a qualified specialist workshop. We recommend that you use a Porsche partner for this work since these are staffed with trained personnel and have the necessary parts and tools.

The ABS control unit is adjusted for the approved tyre dimensions.
The use of tyres with non-approved dimensions can lead to different wheel speeds, causing ABS to switch off.

Off-road ABS
(ABS in Low Range off-road programme)

When the Low Range off-road driving programme is active, an ABS configuration specially matched to off-road driving is activated automatically.

In the event of braking on loose ground, the permissible slip values for ABS braking are increased so that the off-road braking distance is reduced (wheels dig into the surface).
If the driver needs to steer, this off-road driving programme is automatically switched off to maintain steerability.

Hillholder – moving-off assistant on vehicles with Tiptronic S

In Tiptronic selector lever positions **D** and **M**, the hillholder function makes it easier to move off from a stand-still on an upward slope when the engine is running. The driver does not have to apply the brake.

The hillholder function is not active:

- In Tiptronic selector lever positions **N** and **R**,
- In the reduced driving programme **and**
- If not all of the wheels are touching the ground (on difficult terrain, for example).

▷ For further information on moving off with the hillholder function on vehicles with Tiptronic S: Please observe the chapter “STOPPING” on Page 181.

⚠ Safety notes!

In spite of the advantages of the hillholder function, it is still the driver’s responsibility to adapt his driving style and manoeuvres in line with the prevailing conditions.
The increased safety that is provided should not induce you to take greater risks with your safety. The limits set by the physics of driving cannot be overcome, even with the hillholder function.
Driving in limit situations should be avoided, e.g. on icy slopes or on slippery surfaces. Assistance by the hillholder is not guaranteed in these and similar cases.

Porsche Drive-Off Assistant – Moving-off assistant on vehicles with manual transmission

The Porsche Drive-Off Assistant is an assistance function which helps the driver move off on upward slopes. The vehicle must have sufficient road contact.

The Porsche Drive-Off Assistant is available for slopes with a gradient as from around 5 %.

Danger!

Risk of accident.
Assistance by the Porsche Drive-Off Assistant is not guaranteed when moving off on a slippery surface (e.g. on icy or loose surfaces). In this case, the vehicle could slip. The limits set by the physics of driving cannot be overcome, even with the Porsche Drive-Off Assistant. The responsibility for moving off on upward slopes is still the driver's despite the Porsche Drive-Off Assistant.

▷ Always adjust your driving style to the driving conditions and vehicle load, use the footbrake if necessary.

Moving off with Porsche Drive-Off Assistant

1. Hold the vehicle securely on the slope with the footbrake or parking brake.
   The engine must be running.
2. Fully depress the clutch pedal.
3. Engage a gear corresponding to the direction of travel up the slope (1st gear or reverse gear).
4. While keeping the clutch pedal depressed, release the footbrake or foot-operated parking brake.
   The vehicle is held on the slope.
5. Move off as usual.

Note on operation

The Porsche Drive-Off Assistant is not active:

– In the event of shift to neutral.

– When changing gears.

– If the engine is not running.

Danger!

Risk of accident.
If the Porsche Drive-Off Assistant is not active, the vehicle will no longer be held on the slope.

▷ Hold the vehicle with the footbrake.

Engine Braking Support (assistance when driving downhill)

The Engine Braking Support system is an assistance system which helps the driver when driving slowly downhill at speeds up to approx. 20 km/h (12 mph), e.g. on steep slopes or on wintry mountain roads.

Engine Braking Support is active and brakes the vehicle as long as the accelerator is not used when travelling downhill.

If road grip is lost on one or more wheels, the system brakes the wheels which have good road contact.

Like all brakes, the braking ability of the Engine Braking Support system is impaired by slippery surfaces (e.g. on icy or loose surfaces).

Warning!

Risk of accident. Reduced braking ability on a slippery surface.

▷ Always adjust your driving style to the driving situation.

Preconditions:

– The accelerator must not be used when travelling downhill.

– The speed must not exceed approx. 20 km/h (12 mph).

– **Vehicles with Tiptronic S:** Tiptronic selector lever position **D, M** or **R** must be engaged.

– **Vehicles with manual transmission:** A gear must be engaged (1st – 6th or R). The clutch pedal must not be used when travelling downhill.

Tip on driving

The Engine Braking Support system is active when driving downhill either forwards or backwards.

Checks on test stands

Brake tests

Brake tests must be carried out only in the High Range on-road driving programme and on plate-type or roller test stands.

The following limit values must not be exceeded on roller test stands:

– Test speed 7.5 km/h (4.7 mph)

– Test duration 20 seconds

Parking brake test

Parking brake tests on the brake test stand must be performed only with the ignition switched off and with the Tiptronic selector lever in position **N** or with the gearshift lever in neutral position.

Balancing wheels on the vehicle

During finish balancing of the wheels, the entire vehicle must be lifted and the wheels must be free to turn.

Air suspension with level control and height adjustment

On vehicles with air suspension, the driver can set five different levels.
The preselected level is automatically adapted to suit the vehicle speed.
The height of the vehicle is automatically kept constant when the vehicle is loaded.

Tip on driving

It is not permissible to drive on public roads with the vehicle in the off-road or special terrain setting.

Note on operation

Frequent level changes can cause the compressor to overheat. In this case, the compressor must cool for several minutes before level adjustment is fully functional again.

Normal level

The ground clearance at normal level is approx. 215 mm.

Off-road level

This level is intended for off-road driving, field paths and forest paths, etc.
The vehicle is raised by around 26 mm compared with normal level.

Off-road level can be selected only manually at speeds below approx. 80 km/h (50 mph).
The vehicle is automatically lowered to normal level at speeds exceeding approx. 80 km/h (50 mph).
The vehicle is automatically raised to off-road level when the Low Range driving programme is selected.

Special terrain level

This setting is intended only for extremely challenging terrain requiring maximum ground clearance. The vehicle is raised by approx. 56 mm compared with normal level.

The warning light on the instrument panel lights up when special terrain level has been reached.

Special terrain level can be selected only at speeds below around 30 km/h (19 mph).

The vehicle is automatically lowered to off-road level at speeds exceeding approx. 30 km/h (19 mph).

Low level

This level is intended for high-speed driving.
The vehicle is automatically lowered by approx. 24 mm compared with normal level above speeds of around 125 km/h (78 mph).
The level is automatically raised to normal level if the speed drops to below around 40 km/h (25 mph).

Note

If low level was set with the rocker switch in the centre console, low level also remains active at speeds below approx. 40 km/h (25 mph).

Loading level

Caution!

Risk of damage to running-gear parts, assemblies and the vehicle underbody.

The vehicle may bottom when driven down from kerbs, for example, if the ground clearance is insufficient at loading level.

▷ Always switch to normal level before moving off.

This setting makes it easier for you to load the luggage compartment.
The vehicle is lowered by around 54 mm compared with normal level.
The vehicle is automatically raised to normal level at speeds exceeding approx. 5 km/h (3 mph).

Setting level manually

Preconditions

– Ignition on.

– Doors are closed.

Adjusting

▷ Move rocker switch in the appropriate direction.
This sets the next possible height.

Indication of selected level

The corresponding light-emitting diode next to the rocker switch flashes during the adjustment process. The light-emitting diode is lit continuously after adjustment has been completed.
The level change is also indicated on the multi-purpose display of the instrument panel.

Exceptions

Automatic changes from normal level to low level and back are not indicated on the multi-purpose display of the instrument panel.

Note on operation

The level last selected is stored in the memory after the ignition is switched off.

1st actuation: *Off-road level*

Raising the vehicle

▷ Press rocker switch **A** forward once.
A message appears on the multi-purpose display on the instrument panel and the yellow light-emitting diode lights up when off-road level is reached.

2nd actuation: *Special terrain level*

▷ Press rocker switch **A** forward a second time. A message appears on the multi-purpose display on the instrument panel and the yellow and red light-emitting diodes light up when special terrain level is reached.

1st actuation: *Low level*

Lowering the vehicle

▷ Pull rocker switch **A** back once. A message appears on the multi-purpose display on the instrument panel and the yellow light-emitting diode lights up when low level is reached.

2nd actuation: *Loading level*

▷ Pull rocker switch **A** back a second time. A message appears on the multi-purpose display on the instrument panel and the yellow and red light-emitting diodes light up when loading level is reached.

Warning message

Various messages are displayed on the multi-purpose display on the instrument panel if there is a system fault or if the compressor switches off due to overload.

- ▷ For further information on warning messages on the multi-purpose display:
  Please observe the chapter “OVERVIEW OF WARNING MESSAGES” on Page 151.
- ▷ Adapt your driving style to the changed conditions.
- ▷ Consult a qualified specialist workshop in order to remedy a system fault. We recommend that you use a Porsche partner for this work since these are staffed with trained personnel and have the necessary parts and tools.
- ▷ If the overload-protection function causes the compressor to switch off, wait for a time until it has cooled down. The system will function again as soon as it has cooled sufficiently.

The warning message appears when the control system is switched off and when the collapsible spare wheel is being filled. There is no fault present in these cases.
The warning message will disappear once these procedures have been completed.

Raising vehicle with the jack

Whenever it is necessary to raise the vehicle using the jack:

- ▷ Manually set normal level and then switch off level control.

Switching off level control

1. Switch ignition on.
2. Press rocker switch forward for 5 - 10 seconds.
   A message is shown on the multi-purpose display of the instrument cluster.
   The vehicle can now be raised.

Switching level control back on

1. Switch ignition on.
2. Press rocker switch forward for 5 - 10 seconds **or**
3. Move off with the vehicle.
   Level control switches on automatically.

Vehicle transport on car trains, ferries and car transporters

- ▷ Lash the vehicle down only at its wheels.

Porsche Active Suspension Management (PASM)

Various messages are shown on the multi-purpose display of the instrument panel.

▷ For further information on warning messages on the multi-purpose display:
Please observe the chapter “OVERVIEW OF WARNING MESSAGES” on Page 151.

Three different running-gear setups can be selected at the push of a button:

– Comfort

– Normal

– Sport

If the running-gear setups “comfort” or “normal” have been selected, the system automatically changes the setup to “sport” when the vehicle is driven in a sporty manner.

Indication of the selected running-gear setup

The light-emitting diode in the button of the selected running-gear setup is lit.
In addition, the selected running-gear setup is shown on the multi-purpose display of the instrument panel for approx. 12 seconds.

Warning light and warning message

The warning light on the instrument panel lights up if there is a system fault. A warning message is shown on the multi-purpose display of the instrument panel.

▷ Adapt your driving style to the changed conditions.

▷ Consult a qualified specialist workshop in order to remedy the fault. We recommend that you use a Porsche partner for this work since these are staffed with trained personnel and have the necessary parts and tools.

Selecting the running-gear setup

1. Switch ignition on.
2. Press the appropriate button.

Note on operation

The running-gear setup selected last is stored in the memory after the ignition is switched off.

Porsche Dynamic Chassis Control (PDCC)

Function

Porsche Dynamic Chassis Control (PDCC) is a system for roll stabilisation of the vehicle body when driving. Driving comfort and driving safety are improved by active intervention of the anti-roll bars on the front and rear axles.

No separate controls are available for the PDCC system.
After selection of a running-gear setup in Porsche Active Suspension Management (PASM):

– comfort

– normal

– sport

PDCC automatically activates the corresponding on-road driving programme.

▷ For information on selecting a running-gear setup: Please observe the chapter “PORSCHE ACTIVE SUSPENSION MANAGEMENT (PASM)” on Page 206.

PDCC automatically activates the off-road driving programme if Low Range reduction is switched on.

▷ For information on switching Low Range reduction on and off:
Please observe the chapter “DRIVING PROGRAMMES FOR ON-ROAD AND OFF-ROAD DRIVING” on Page 184.

Warning message

A warning message appears on the multi-purpose display of the instrument panel if there is a system fault.

▷ For further information on warning messages on the multi-purpose display:
Please observe the chapter “OVERVIEW OF WARNING MESSAGES” on Page 151.

▷ Adapt your driving style to the changed conditions.

▷ Consult a qualified specialist workshop in order to remedy the fault. We recommend that you use a Porsche partner for this work since these are staffed with trained personnel and have the necessary parts and tools.

Checking hydraulic fluid

Regular checking and changing of the hydraulic fluid takes place
as part of servicing.

Further important information on “Maintenance” can be found in a separate chapter.

▷ Please observe the chapter “NOTES ON MAINTENANCE” on Page 267.

Off-road driving

Please read this chapter carefully before driving off road with your Porsche.

The information provided will familiarise you with the special advantages of your vehicle, allowing you to arrive at your destination safely every time.

We recommend practising on less rugged terrain.

Vehicles with SportDesign package

Warning!

Risk of damage. On vehicles with the Sport-Design package, front, rear and side member trims are painted. Off-road driving can seriously damage these trim parts.

- ▷ When driving off-road, make sure these parts are not damaged.
- ▷ Make sure there is sufficient clearance between obstacles and the underside of the vehicle.
- ▷ Avoid driving through water.
- ▷ Do not use side member trims or rear wheel spoilers as a running board.

Maintenance note

Please bear in mind that off-road driving subjects all vehicle components to considerably more wear than normal use, making professional inspection and maintenance after every use vital preconditions for functioning and safety.

Grains of sand, dirt particles and other abrasive materials entering the brakes can cause excessive wear or unpredictable braking action.

Rules for off-road driving

- ▷ Pay attention to the ground clearance of the vehicle. This information is provided in the chapter Technical Data in this Driver's Manual: Please observe the chapter "GROUND CLEARANCE" on Page 370.
- ▷ Activate the Low Range off-road driving programme.
- ▷ Stow or fasten luggage and loads securely. For information on stowing loads and luggage: Please observe the chapter "STOWING LOAD" on Page 227.
- ▷ If unknown terrain is obscured from view, examine it on foot first and traverse it with extreme caution.
  This way, obstacles are easier to recognise and damage to the vehicle is avoided.
- ▷ Always drive with the engine running. Steering assistance is provided only with the engine running.
- ▷ Drive slowly and uniformly.
- ▷ Always make sure that the wheels are in contact with the ground.
- ▷ Before driving through water, check the water depth, the condition of the surface beneath it and the speed of the water.
- ▷ Look out for obstacles such as boulders, holes, tree stumps or channels.
- ▷ Always keep the sliding/lifting roof or Panorama roof system and the side windows closed while driving.
- ▷ Do not depart from marked routes or paths.
- ▷ Respect nature.
  Always obey off-limits signs.

Driving systems for off-road driving

Specially adapted driving programmes or power-transmission and running-gear control systems are available for off-road driving:

- Low Range off-road programme
- Centre differential lock
- Rear-differential lock
- Off-road PSM
- Off-road ABS

▷ For further information on the functioning of running-gear control systems:
Please observe the chapter "POWER-TRANSMISSION AND RUNNING-GEAR CONTROL SYSTEMS" on Page 190.

Before driving off-road

Tyres

▷ Check tread depth and filling pressure of tyres.

▷ Check for damage and remove any foreign objects (e.g. stones) from the tread.

▷ Replace missing valve caps.

Rims

▷ Replace dented or damaged rims before driving off-road.

Vehicles with SportDesign package

⚠ Warning!

Risk of damage.
On vehicles with the SportDesign package, front, rear and side member trims are painted.
Off-road driving can seriously damage these trim parts.

▷ When driving off-road, make sure these parts are not damaged.

▷ Make sure there is sufficient clearance between obstacles and the underside of the vehicle.

▷ Avoid driving through water.

▷ Do not use side member trims as a running board.

After driving off-road

Off-road driving places a greater burden on the vehicle than normal driving on roads.

We recommend inspecting the vehicle after off-road driving. Potential damage poses an accident risk and impairs driving comfort. Damage on the vehicle is recognised in good time if the vehicle is checked.

⚠ Caution!

Vehicle damage poses an accident risk for the vehicle occupants and other road users.

▷ In cases of doubt, have your vehicle checked by a qualified specialist workshop.

▷ Examine tyres for signs of damage such as cuts, tears, bulges or foreign objects stuck in the tread and replace if necessary.

▷ Have any damage to your vehicle repaired without delay.
Consult a qualified specialist workshop. We recommend that you use a Porsche partner for this work since these are staffed with trained personnel and have the necessary parts and tools.

Recommended procedure

- ▷ Deactivate the Low Range off-road driving programme.
- ▷ Clean headlights and tail lights and check them for signs of damage.
- ▷ Clean the front and rear number plates.
- ▷ Clean the tyre tread with a jet of water and remove any foreign objects.
- ▷ Clean wheels, wheel housings and the underbody with a jet of water.
- ▷ Check whether the vehicle has picked up plant parts or branches.
  These materials increase the risk of fire and can damage fuel lines, brake hoses, boots of the axle joints and drive shafts.
- ▷ After off-road driving, always check the entire floor assembly, tyres, body structure, steering system, running gear and exhaust system for signs of damage.
- ▷ After driving for an extended period through mud, sand, water or substances with a similar soiling effect, check the brake discs, brake pads, wheels and axle joints and have them cleaned.
- ▷ If you experience severe vibrations after driving off-road, check the wheels for foreign substances.
  These substances can produce an imbalance which might be responsible for the vibrations. Removing these deposits may remedy the problem.

Uphill driving

Danger!

Danger of severe or fatal injuries and risk of damage if the vehicle should overturn.

- ▷ Do not turn round when driving uphill.
- ▷ If it is not possible to climb a gradient, the vehicle must be backed down in reverse gear.
- ▷ Do not drive over embankments or slopes at an angle to the line of maximum gradient.
- ▷ If the vehicle starts to tilt, immediately steer in the direction of the tilt (line of slope).
- ▷ When driving uphill, never let the vehicle roll back when in idle or not in gear.
  Exclusive use of the footbrake is too risky in such situations.

Note on operation

- ▷ Activate the Low Range programme before taking extreme uphill or downhill gradients.

Tips on driving

- ▷ Do not perform manual gear changes when driving, and try to avoid stopping.
- ▷ Avoid high engine speeds (max. 2,500 rpm).

Traction on uphill slopes

Note on operation

- ▷ Activate the Low Range programme and engage differential lock(s) if necessary.

Tips on driving

- ▷ When driving uphill, go easy on the accelerator and make sure that wheels have sufficient traction (do not spin).
- ▷ Avoid high engine speeds (max. 2,500 rpm).
- ▷ Drive slowly.

Driving downhill

Danger!

Danger of severe or fatal injuries and risk of damage if the vehicle should overturn.

- ▷ Do not drive over slopes at an angle to the line of maximum gradient.
- ▷ Drive downhill slowly, with the front wheels pointing straight ahead.
- ▷ If the vehicle starts to tilt, immediately steer in the direction of the tilt (line of slope).
- ▷ When driving downhill, never let the vehicle roll when in idle.
- ▷ Use engine braking effect.
  If the engine braking effect is not sufficient to appropriately check the speed, gently apply the footbrake.

Note on operation

- ▷ Activate the Low Range off-road driving programme. The off-road ABS is switched on automatically.

Tips on driving

The same general principle as for uphill driving applies to downhill driving.

- ▷ Do not perform manual gear changes when driving, and try to avoid stopping.
- ▷ Avoid high engine speeds (max. 2,500 rpm).

A special circuit of the off-road ABS permits controlled brief lock-up of the front wheels so that they can dig into the loose surface more effectively.
Locked wheels slip and can no longer be steered.

- ▷ When driving down steep hills on unpaved surfaces, brake carefully to prevent sliding.

Humps

- ▷ Pay attention to the ground clearance of the vehicle. This information is provided in the chapter Technical Data in this Driver's Manual: Please observe the chapter "GROUND CLEARANCE" on Page 370.

Note on operation

- ▷ Activate the Low Range programme and engage differential lock(s) if necessary.

Tips on driving

- ▷ Just before reaching the hump, ease off the accelerator slightly and use only the vehicle's momentum to cross the hump. This will prevent the vehicle from jumping over the hump and landing on the following downward slope at excessive speed.
- ▷ Avoid high engine speeds (max. 2,500 rpm).

Water crossing

▷ Pay attention to the ground clearance of the vehicle. This information is provided in the chapter Technical Data in this Driver's Manual: Please observe the chapter "GROUND CLEARANCE" on Page 370.

Danger!

Danger of drowning if water enters the vehicle. Risk of damage to the engine and accessories if water penetrates.

▷ Before driving through water, check the water depth **A**, water speed and the condition of the surface beneath it.
The water depth **A** must not exceed 50 cm (55.5 cm for vehicles with level control and height adjustment).

▷ Make sure that the door sills and rubber seals are clean before starting to drive.

▷ Do not drive through deep or rapidly flowing water.
Deep or rapidly flowing water such as mountain streams can cause the vehicle to deviate from the desired path.

▷ Avoid producing bow waves by driving at an appropriate speed.

▷ Never open the doors when driving through water.

Soiling can impair the braking action.

▷ Check and clean the brakes if they have been soiled.

Danger of steering assistance failing during a long journey in water if the drive belt slips.

▷ If the steering assistance fails, more effort will be required to steer.

Danger of damage to the electrical systems.

▷ Avoid driving through salt water.

Tips on driving

- ▷ Avoid high engine speeds (max. 2,500 rpm).
- ▷ Do not perform manual gear changes when driving, and try to avoid stopping.
  Moving off in water can be difficult due to the high resistance and the loose surface involved.
- ▷ Start the water crossing at a shallow place at walking speed.
- ▷ After checking the body of water, take the shortest route through it.
- ▷ Never drive into water with momentum. The resulting bow wave could damage the engine and its accessories.
- ▷ Adjust your driving style to the unfamiliar surroundings.
- ▷ Drive through the water slowly and at a constant speed.
- ▷ Never turn around when crossing a body of water.
- ▷ If it is not possible to cross the body of water, the vehicle must be backed out of it in reverse gear.

The servo pump and generator can fail if the vehicle is driven through water for an extended period.

- ▷ If the servo pump fails, substantially more force is necessary in order to steer.

Maintenance note

The vehicle requires a special check after the water crossing.

- ▷ Remove mud from the tyre tread.
- ▷ Briefly brake the brake pads dry after driving through the water.

Crossing obstacles

Caution!

Risk of damage to the underbody and chassis components if obstacles are traversed improperly.

- ▷ Always pay attention to the ground clearance of your vehicle.
- ▷ Slowly drive over the middle of tree trunks. boulders or other obstacles with one of the front wheels.
- ▷ Cross the obstacle with the rear wheel in the same way.

Note on operation

- ▷ Activate the Low Range programme and engage differential lock(s) if necessary.

Tips on driving

- ▷ Have your passenger direct you if necessary.
- ▷ Avoid high engine speeds (max. 2,500 rpm).
- ▷ Drive slowly.

Driving on sand

Note on operation

- ▷ Activate the Low Range programme and engage differential lock(s) if necessary.

Tips on driving

Loose sand is an especially tricky surface for off-road driving.

You can often become stuck in sand within minutes if you do not drive correctly in such situations.

- ▷ Drive at a brisk pace and do not stop under any circumstances. Otherwise, the vehicle will become bogged down.
- ▷ Follow existing tracks – provided that they have not been covered by blown sand, are not too deep and the vehicle's ground clearance is sufficient.
  Pay attention to the ground clearance of the vehicle. This information is provided in the chapter Technical Data in this Driver's Manual: Please observe the chapter "GROUND CLEARANCE" on Page 370.
- ▷ Avoid high engine speeds (max. 2500 rpm).

When driving on slopes with soft sand on vehicles with Tiptronic S:

▷ Use the manual select mode **M** in addition to the Low Range programme.

If your vehicle becomes stuck nevertheless:

Do not spin the wheels. Instead, use branches, mats or similar items to provide adequate traction so that you can drive out of the critical area.

Track ruts

Other vehicles leave ruts on many off-road courses or gravel roads.

▷ Pay attention to the ground clearance of the vehicle. This information is provided in the chapter Technical Data in this Driver's Manual: Please observe the chapter "GROUND CLEARANCE" on Page 370.

Caution!

Risk of damage to the vehicle floor when driving through ruts that are too deep.

▷ Always bear in mind the vehicle's ground clearance.

▷ Do not drive through ruts that are too deep.

Note on operation

▷ Activate the Low Range programme and engage differential lock(s) if necessary.

Tips on driving

▷ In cases of doubt, drive with one wheel on the grass strip.

▷ Avoid high engine speeds (max. 2,500 rpm).

▷ Drive slowly.

Airbag systems

Safety notes!

- **Always fasten seat belts**, as the triggering of the airbag system depends on the force and angle of any impact.
- Make sure there are no persons, animals or objects between the driver or passengers and the area into which the airbag inflates.
- Always hold the steering wheel by the outer rim.
- For airbags to give effective protection, they must be a certain distance from the driver or passengers.
  So select your seat position so that it is not unnecessarily close to the airbags.
  Do not lean against the inside of the doors (side airbags).
- Objects must not protrude out of the door oddments tray.
- Do not transport heavy objects on or in front of the seats.
- Give your passengers all the information in this chapter.
- Always keep feet in the footwell while driving. Do not put feet on the dashboard or the seat area.

Function

In conjunction with the seat belts, the airbags are a safety system designed to provide the driver and passengers with maximum protection from injury in an accident.

Airbags protect the face and upper body, whilst simultaneously damping the motion of the driver and passengers in the impact direction in the event of a frontal impact or side impact.

The **front airbags** are installed under the padded steering wheel panel on the driver's side and in the dashboard on the passenger's side.
The **side airbags** of the front seats are installed in the side of the seat backrests.
The **head airbags** are installed above the doors in the roof area.

The respective airbags could trigger depending on the angle of impact and force of impact.

After inflation, the front airbags deflate so quickly again that any restriction of vision is insignificant. Equally, the inflating noise will be drowned out by the noise of the accident.

Safety notes!

- Always consult a qualified specialist workshop if the airbag system is faulty.
- Have triggered airbag systems replaced immediately.
- Do not modify the wiring or components of the airbag systems.
- Do not attach any additional trim or stickers to the steering wheel or in the vicinity of the passenger airbag, side airbags or head airbag.
- Do not route any cables of additional electrical equipment in the vicinity of the airbag wiring harnesses.
- Do not disassemble airbag components (e.g. steering wheel, front seats, roof trims).
- If you sell your Porsche, tell the buyer that the car is fitted with airbags and refer him to the chapter "Airbag Systems" in the Driver's Manual.
- Have the functional readiness checked at the prescribed service intervals.

Warning light

Faults are indicated by the warning light on the tachometer.

▷ Please consult a qualified specialist workshop in the following cases:

– If the warning light does not light up when the ignition is switched on **or**

– If the warning light does not go out once the engine is running **or**

– If the warning light appears whilst driving.

Warning light "PASSENGER AIRBAG OFF"

▷ For information on the function of the warning light **A** "PASSENGER AIRBAG OFF":
Please observe the chapter "SWITCHING PASSENGER AIRBAG ON AND OFF" on Page 44.

Danger!

Risk of serious or mortal injury from the passenger airbag.
If the "PASSENGER AIRBAG OFF" warning light is not lit when the ignition is switched on and the Airbag OFF switch is switched off, this could indicate a fault in the system.

▷ Do not fit a child restraint system on the passenger's seat.

▷ Have the fault remedied immediately.

Risk of serious or mortal injury for the passenger if the passenger airbag remains switched off after the child seat is removed.

▷ The passenger airbag must be switched on again once the child seat has been removed.

Disposal

Non-ignited gas generators, or whole vehicles or subassemblies with airbag units, must not be disposed of as "normal" scrap or waste or put into any other form of end storage.
Your Porsche partner will be able to give you details about disposal.

Luggage Compartment, Loadspace and Storage

Folding rear seats forward
and returning to upright position..... 220
Loadspace 223
Cargo management system 224
Stowing load..... 227
Luggage compartment cover 228
Luggage safety net 229
Ski bag..... 231
Roof Transport System..... 233
Storage..... 234
Cupholder..... 238
DVD player under the right front seat..... 239
Ashtray, front 240
Cigarette lighter 241

Folding rear seats forward and returning to upright position

The rear seats are divided and can be folded forward individually to make the loadspace bigger.

Caution!

Risk of damage to seat cushions, backrest and seat belt if only the backrest is folded forward.

▷ Always fold seat cushions and backrest forward.

Folding rear seats forward

If the luggage safety net is installed, always first move the left seat cushion to a vertical position and fold the left rear seat backrest forward.

On vehicles with automatically controlled four-zone air conditioning:

Safety button

▷ Press the safety button in the driver's door armrest before folding the rear seats forward. The rear control panel for the air conditioning is deactivated.
This prevents unintentional adjustment of the air conditioning.
The symbol in the switch lights up.

1. Move front seats forward.
2. Remove the headrests of the backrest to be folded forward.
   To do this:
   Please observe the chapter "HEADRESTS" on Page 36.
3. Pull seat cushion up at loop **A**.

4. Raise seat cushion vertically.

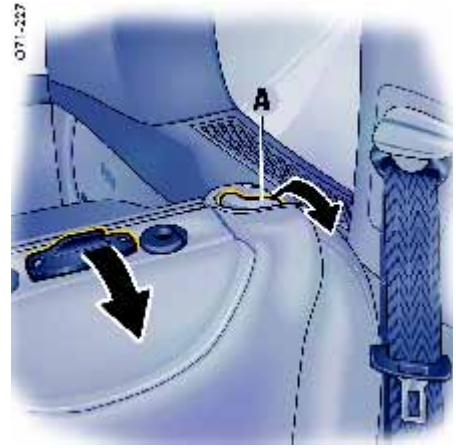

5. Pull release lever **A** and fold the backrest forward.

6. Insert support bracket of the backrest in the support hook on the seat cushion (**arrow**).

7. Insert headrest into the mounting in the seat cushion.

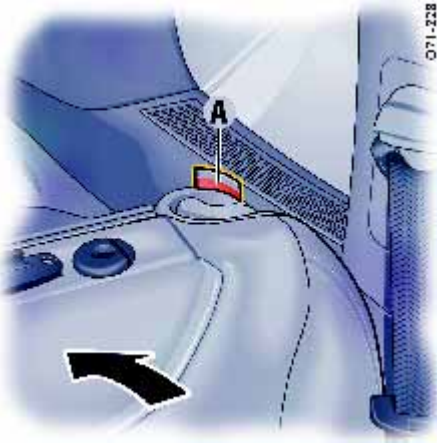

Adjusting rear seats to vertical position

1. Remove the headrests from the seat cushion.
2. Make sure that the seat belts are not trapped. Fold up the backrest until it locks with an audible click.
   The red “check tab” **A** must be lowered completely.

⚠ Warning!

Danger of injury and/or damage as a result of braking or in the event of an accident.

▷ Do not place any objects between the seat cushion and foam part.

3. Fold seat cushion back and press down at the rear.
   Make sure that the belt buckles are accessible.
4. Insert the headrests into the backrest.
   To do this:
   Please observe the chapter “HEADRESTS” on Page 36.

Loadspace

The maximum permissible load on the loadspace floor is 400 kg. The weight must be distributed evenly over the entire loadspace.

▷ For information on stowing loads and luggage: Please observe the chapter “STOWING LOAD” on Page 227.

Opening loadspace floor

1. Pull handle **A** and lift the loadspace floor.
2. Unclip support arm **B** and insert it into fixing recess **C** in the loadspace floor.

Closing loadspace floor

1. Lift the loadspace floor and clip support arm **B** into its holder in the vehicle floor.
2. Close the loadspace floor.

Tie-down rings

You can secure the load in the luggage compartment against slipping. Tie-down straps or the luggage net can be fastened to the tie-down rings **D**.

▷ Make sure that all rings are equally loaded when securing a load.

Note on operation

The tie-down rings are not designed to restrain a heavy load in an accident.

Cargo management system

The cargo management system is a variable system for securing objects in the luggage compartment.

It comprises two telescopic rails integrated in the loadspace, a telescopic bar, four tie-down rings as well as a strap reel and a reversible mat. The reversible mat is provided with an anti-slip structure on the underside.

▷ For information on stowing loads and luggage: Please observe the chapter “STOWING LOAD” on Page 227.

Inserting and adjusting the telescopic bar

1. Insert the two end elements of the telescopic bar in the openings **A** of the mounting rails.
2. Press the end elements down and push against the load. When the bar is correctly positioned, the load should no longer be able to move.
3. Release the end elements.
4. Check that the elements are locked in position by pushing against them.

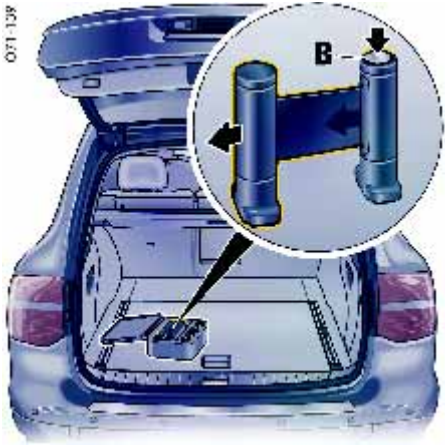

Inserting and adjusting the strap reel

The strap reel is stored in the supplied bag together with the tie-down rings in the luggage compartment or in the spare-wheel well.

1. Take the strap reel out of the bag.
2. Press the button **B** on the end element of the strap reel and pull both elements out to the width of the two mounting rails.

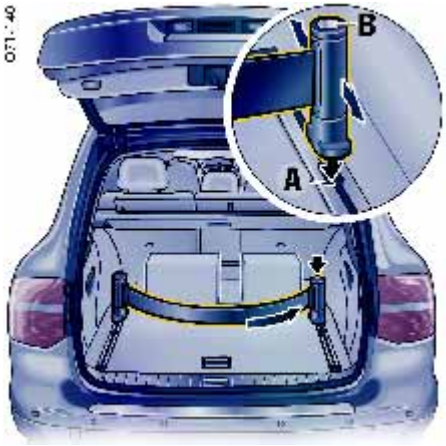

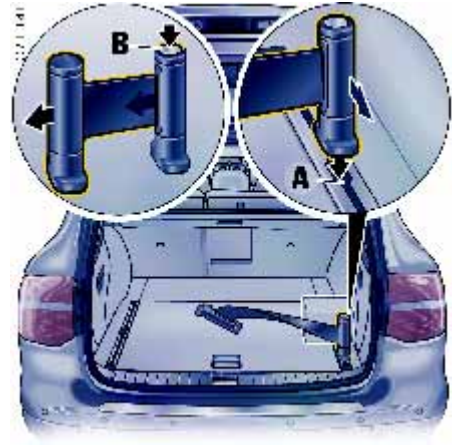

3. Insert the two end elements of the strap reel in the openings **A** of the mounting rails.
4. Press both end elements down and push against the load.
5. Release the end elements.
6. Check that the elements are locked in position by pushing against them.
7. Press button **B** and tension the strap so that the load cannot move.
8. Release button **B**.

Inserting strap reel on one rail

1. Press button **B** on the end element and pull both elements apart slightly.
2. Insert one end element of the strap reel in the opening **A** of a mounting rail, press down and slide into position.
3. Insert the second element in the same opening **A**, press down and slide in the opposite direction.
4. Check that the elements are locked in position by pushing against them.
5. Press button **B** and place the strap around the item of luggage.
   Tension the belt so that the item of luggage cannot move.
6. Release button **B**.

Inserting and adjusting tie-down rings

Tie-down straps or the luggage net can be fastened to the tie-down rings.

Make sure that all rings are equally loaded when securing a load.

The tie-down rings are not designed to restrain loads in serious accidents.

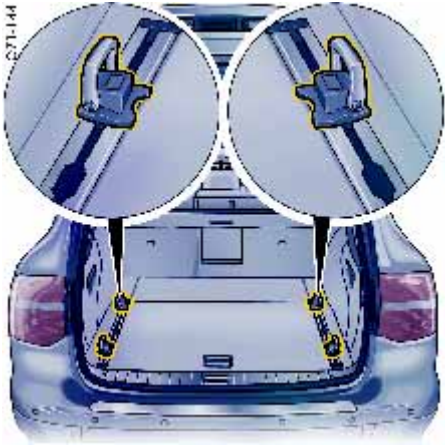

1. Insert the tie-down ring in the opening **A** of the mounting rail.
2. Press button **C** nach down and slide the tie-down ring in the correspondig direction.
3. Release button **C**.
4. Check that the tie-down ring is locked in position by pushing it.
5. Insert the remaining tie-down rings.

Note on operation

The opposing tie-down rings must always be inserted in the opposite direction.

Stowing load

Safety notes!

An unsecured or incorrectly positioned load can slip out of place or endanger the vehicle occupants during braking, direction changes or in accidents.
Never transport objects which are not secured (accident, braking, curves).

- ▷ Always transport loads in the loadspace, never in the passenger compartment (e.g. on or in front of the seats).
- ▷ Support the load against the seat backrests whenever possible. Always lock the backrests into place.
- ▷ Place the load behind unoccupied seats whenever possible.
- ▷ Stow heavy objects as far forward as possible on the floor, with lightweight objects behind them.
- ▷ Never load the vehicle higher than the top edge of the seat backrest.
- ▷ Always protect the passenger compartment with a luggage safety net and a luggage compartment cover.
  Do not drive with objects on top of the luggage compartment cover.
- ▷ If the rear seats are not occupied, the backrests can be additionally secured with the seat belts. Simply cross the outer seat belts and insert each into the opposite buckle.
- ▷ Make sure that the load cannot damage the heating filaments of the rear window and the TV antenna of the side windows.

Luggage net

- ▷ Luggage must always be stowed completely under the luggage net.
  The luggage net is suitable only to prevent light objects from slipping.

Tie-down belts

- ▷ Do not use elastic belts or straps to tie down a load.
- ▷ Do not route belts and straps over sharp edges.
- ▷ Observe the directions for use and information for the tie-down equipment.
- ▷ Use only belts with a tear strength of at least 700 kg and a maximum width of 25 mm.
- ▷ Cross the belts over the load.

Driving

- ▷ The vehicle's handling changes depending on the vehicle load. Adapt your driving style to the changed driving behaviour.
- ▷ Do not exceed the maximum gross weight and the axle load.
  This information is provided in the chapter Technical Data in this Driver's Manual:
  Please observe the chapter "WEIGHTS" on Page 369.
- ▷ Never drive with the rear window or rear lid open.
  Exhaust gases can enter the passenger compartment.
- ▷ Adapt the tyre pressure to the load.
  If you change the tyre pressure, you must also update the setting for Tyre Pressure Monitoring. For information on setting Tyre Pressure Monitoring on the multi-purpose display: Please observe the chapter "SETTING VEHICLE LOADING AND ADJUSTING TYRE PRESSURE" on Page 138.
- ▷ The information on tyre pressures for partially and fully loaded vehicles is provided in the chapter Technical Data in this Driver's Manual:
  Please observe the chapter "TYRE PRESSURES, COLD" on Page 367.

Luggage compartment cover

Luggage can be protected against prying eyes with the luggage compartment cover.

- ▷ Always pull out the luggage compartment cover when transporting objects in the luggage compartment.
  The luggage compartment cover is not designed to carry objects.
- ▷ Do not hang bags or objects on the support brackets **A**. The support brackets could break off.

⚠ Warning!

Risk of injury. In the event of braking, direction changes or in an accident, objects can slide into the passenger compartment and endanger the occupants.

- ▷ Do not place objects on top of the luggage compartment cover.

Pulling out luggage compartment cover

- ▷ Pull out the cover by the handle and insert it into the guides on the left and right side walls.

Luggage compartment cover, retracting

- ▷ Disengage the luggage compartment cover from the guides on the side walls and carefully guide it back into the retractor roller.

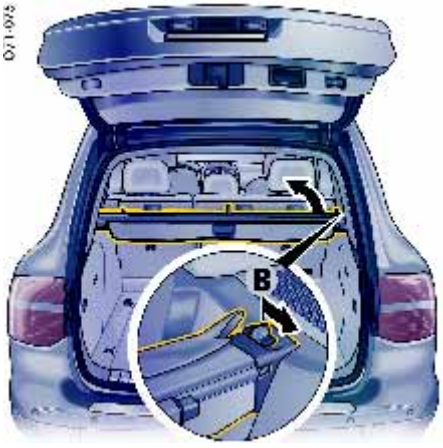

Removing luggage compartment cover

- ▷ Pull the release **B** back.
- ▷ Lift the cover at the right and remove.

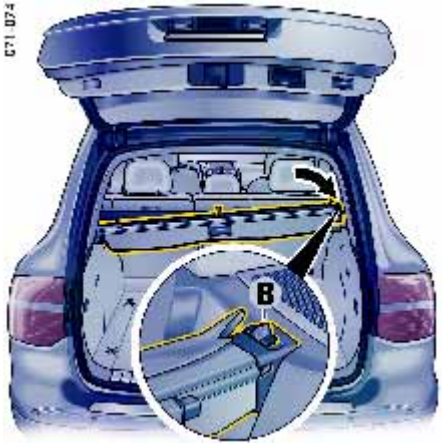

Installing luggage compartment cover

- ▷ Insert the cover into the receiving holder on the left side.
- ▷ Press the cover down into the holder on the right side until it can be heard and felt to engage.
  Release **B** must point forwards.

Luggage safety net

The luggage safety net can hold back only light-weight items in the event of braking, changes in direction or in an accident.

- ▷ For information on stowing loads and luggage: Please observe the chapter “STOWING LOAD” on Page 227.

⚠ Warning!

Risk of injury. Unsecured loads can slip and endanger the occupants in the event of braking, changes in direction or in an accident.

- ▷ Always secure the passenger compartment with the luggage safety net.
- ▷ Always fasten the load at the tie-down rings.
- ▷ Never load the vehicle higher than the top edge of the seat backrest.

Maintenance note

- ▷ If the luggage safety net was heavily stressed or damaged during braking or in an accident etc., have the safety net and its retaining bracket checked by a qualified specialist workshop.
  We recommend that you use a Porsche partner for this work since these are staffed with trained personnel and have the necessary parts and tools.

Permitted uses

A – Variant 1

B – Variant 2

In the case of variant, 2, it is necessary to first fold forward the rear seats and open the covers of the luggage safety net fixing points.
For information on folding the rear seats forward: Please observe the chapter “FOLDING REAR SEATS FORWARD” on Page 220.

Securing passenger compartment with luggage safety net

Pulling out luggage safety net

▷ Pull the luggage safety net out and engage the fastening hooks into the fixing rings on the ceiling.
The luggage safety net fastening hooks can be pulled out at the sides.

▷ Make sure that the luggage safety net fastening hooks are properly engaged in the fixing rings.

Removing luggage safety net assembly from the rear seat backrest

1. Open both rear doors.
2. Fold down the left rear seat backrest first, followed by the right rear seat backrest. The seat cushions need not be folded over for this purpose.

▷ For information on folding the rear seats forward:
Please observe the chapter “FOLDING REAR SEATS FORWARD” on Page 220.

3. Push the luggage safety net assembly in the **direction of arrow 1**.
4. Lift the luggage safety net assembly up and off (**direction of arrow 2**).

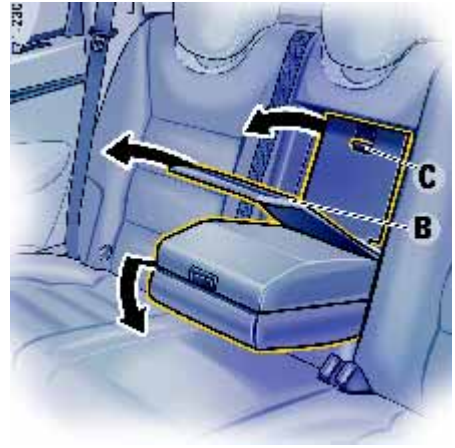

Ski bag

Long objects such as skis can be transported cleanly and without damaging the passenger compartment.

Loading ski bag

1. Press release button **A** on the lid of the pass-through facility.
   Fold down the lid.
2. Fold down the armrest of the rear seat backrest.
3. Pull protective cover **B** off the Velcro strip at the top and fold down.
4. Press release button **C** on the lid of the pass-through facility and fold down the lid.
5. Pull out and unfold the ski bag.
6. Insert objects into the ski bag from the luggage compartment.

Securing load

▷ Secure the stowed objects with tightening belt **D**.

▷ Insert belt tongue into the buckle.

Stowing the ski bag

1. Empty ski bag.
2. Pull ski bag into the passenger compartment.
3. Close lid in the luggage compartment.
4. Carefully fold the ski bag and close the lid.
5. Insert protective cover and fasten it with the Velcro strip.

Note on operation

▷ Fold up the ski bag only when it is dry.

Roof Transport System

- ▷ Please follow the separate instructions for fitting the Roof Transport System.
- ▷ Only use Roof Transport Systems from the Porsche Tequipment product range or Roof Transport Systems which have been tested and approved for your car by Porsche. Fitting normal commercially available luggage racks is **not** possible.

The **Porsche Roof Transport System** allows you to carry various sports and hobby equipment. Your Porsche partner will be pleased to tell you about the various different uses of the Roof Transport System.

⚠ Safety notes!

- ▷ Completely remove the Roof Transport System before using an automatic car wash – risk of damage to the vehicle!
- ▷ Do not exceed the maximum permitted roof load, the maximum permitted gross weight and the maximum permitted axle loads. This information is provided in the chapter Technical Data in this Driver's Manual: Please observe the chapter "WEIGHTS" on Page 369.
- ▷ Distribute load evenly, with heavy items as low as possible. Items of luggage must not project beyond the side of the load area.
- ▷ Fix and secure every item to the basic carrier with a rope or lashing strap (do not use elastic rubber tensioners).
- ▷ Before every journey, and at regular intervals during long trips, check that Roof Transport System and load are secure. Re-tighten if necessary and secure additionally by locking.

When the Roof Transport System is loaded, the maximum speed depends on the nature, size and weight of the load being carried.

- ▷ But never drive faster than 140 km/h (90 mph).
- ▷ With the basic carrier fitted and no load, do not exceed a maximum speed of 180 km/h (110 mph).
- ▷ Driving, braking and steering behaviour change due to the higher centre of gravity and the greater wind-resistant area. You should adapt your driving style appropriately.
- ▷ Since fuel consumption and noise are increased with the Roof Transport System fitted, it should not remain on the vehicle if not in use.

Storage

Warning!

Danger of injury during braking, rapid direction changes or in an accident.

- ▷ Do not carry items of luggage or objects in the passenger compartment unsecured.
- ▷ Do not transport any heavy objects in open oddments trays.
- ▷ Always keep the covers of the oddments trays closed while driving.
- ▷ Always protect the passenger compartment with a safety net and a luggage compartment cover.

Note on operation

An unsecured or incorrectly positioned load can slip out of place or endanger the vehicle occupants during braking, direction changes or in accidents.

- ▷ For information on stowing loads and luggage: Please observe the chapter “STOWING LOAD” on Page 227.

Storage options

- In the glasses case in the roof console,
- In the glove compartment, pen holder,
- In the front and rear armrests,
- In the drawer underneath the passenger’s seat,
- In the storage compartments at the sides of the luggage compartment,
- In the door trim panels,
- In the centre console, front and rear,
- On the back of the front seats,
- Coat hooks on the rear grab handles,
- Under the load compartment floor,
- In the front and rear cupholders.

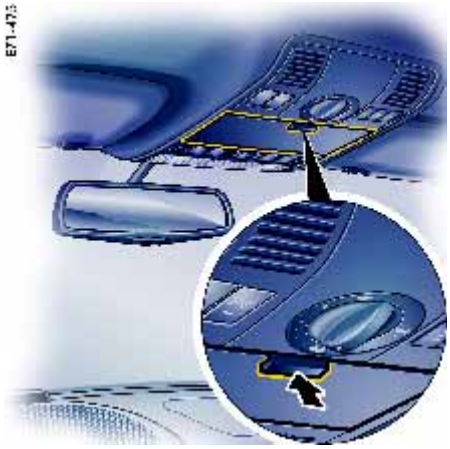

Glasses case in the roof console

Sunglasses, for example, can be stored in this storage compartment.

Opening

- ▷ Press button (**arrow**).

Closing

- ▷ Close the lid until it clicks audibly into place.

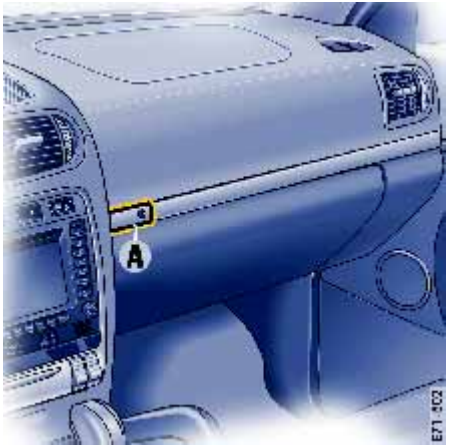

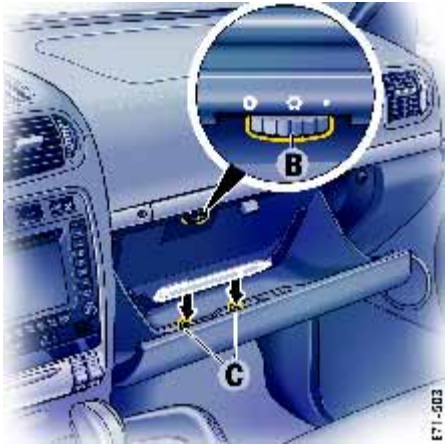

Glove compartment

A drawer, designed to hold the vehicle folder, is located in the glove compartment.

Opening

▷ Press button **A** and open cover.

Locking

▷ Always lock button **A** with the vehicle key to secure the contents from unauthorised access.

B - *Control for glove compartment cooling*
C - *Holder for pens*

Cooling the glove compartment

▷ Turn thumb wheel **B** counter-clockwise.

Switching off cooling

▷ Turn thumb wheel **B** clockwise.

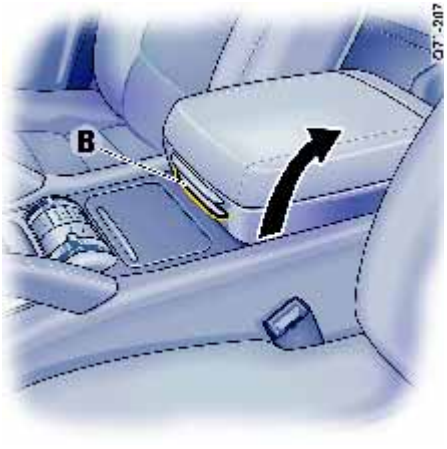

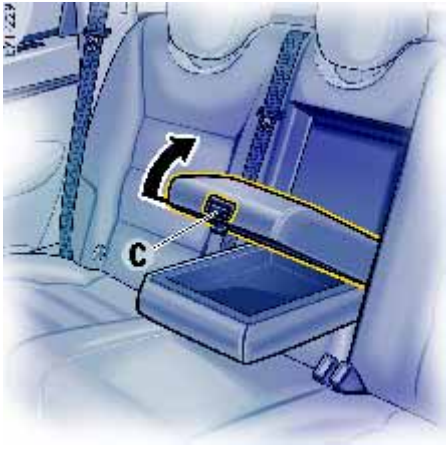

Oddments trays in the armrest between the front seats

Two oddments trays are located in the armrest.

Opening the top tray

▷ Press button **A** and lift the cover.

Opening the lower tray

▷ Press button **B** and lift top tray with the cover closed.

Oddments tray in the rear armrest

An oddments tray is located in the armrest.

Opening the oddments tray in the armrest

1. Fold down the armrest completely.
2. Press button **C** and lift the cover.

Side storage compartments in the luggage compartment

Depending on how the vehicle is equipped, there is an additional storage option in the left-hand storage compartment. The shelf can be removed to increase the size of the compartment.

Opening the storage compartment

▷ Pull off the cover at the handle recess.

Closing the storage compartment

▷ First, insert the cover at the bottom and then close it until it audibly clicks into place.

Caution!

Risk of damage.

▷ Because of heat, the right-hand storage compartment cannot be used as such in vehicles that have air suspension with level control and height adjustment.

Drawer under the right front seat

There is room for the fire extinguisher in the drawer underneath the right front seat.
On vehicles with DVD navigation, the DVD player is under the right front seat.

▷ For information on the installation location of the DVD player:
Please observe the chapter “DVD PLAYER UNDER THE RIGHT FRONT SEAT” on Page 239.

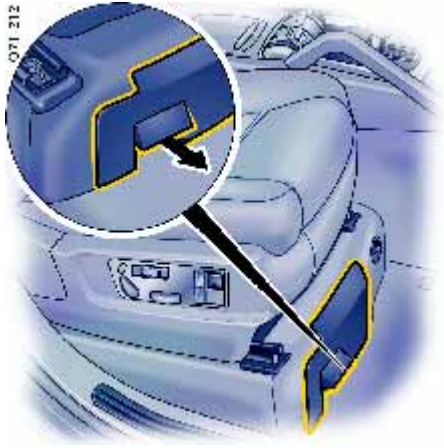

Opening

▷ Lift the release handle and pull out the drawer.

Closing

▷ Close the drawer until it clicks audibly into place.

Cupholder

You can place drinks cans and cups in the cupholder.

▷ Keep the cupholder closed while driving.

⚠ Warning!

Risk of scalding or damage due to spilling drinks.

▷ Only use containers which fit.

▷ Never put overfull containers in the cupholder.

▷ Never use hot drinks.

Opening front cupholder

▷ Open shutter **A** (**arrow**).

Removing cupholder insert

The cupholder insert can be removed for cleaning. Removing the insert makes an additional oddments tray available.

▷ Open shutter **A**.

▷ Press together the cupholder insert at the two engagement recesses **B**.

▷ Remove the cupholder insert.

Opening rear cupholder

▷ Press on the cover of the cupholder (**arrow**).

Closing rear cupholder

▷ Close and engage the cupholder.

DVD player under the right front seat

On vehicles with DVD navigation, the DVD player is under the right front seat behind a cover.

Opening the cover

▷ Pull cover upwards by means of handle (**direction of arrow 1**).

▷ Pull out cover towards the front (**direction of arrow 2**).

Closing the cover

▷ Insert the four guide lugs of the cover into their openings (**arrow**).

▷ Press the cover into place.

▷ Push down cover until it can be felt clicking into place.

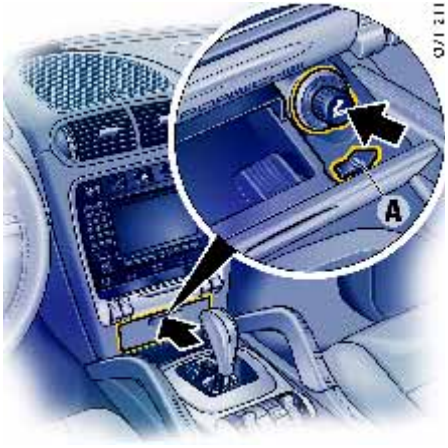

Ashtray, front

Opening

▷ Press ashtray lid briefly.

Emptying

▷ Move unlocking button **A** to the right and pull out the ashtray insert in upward direction.

▷ After emptying, replace the ashtray insert and push it down until it clicks audibly into place.

Ashtray, rear

Depending on the vehicle equipment, an ashtray may be installed in the rear door panels.

Opening

▷ Press ashtray lid briefly.

Emptying

▷ Open ashtray lid and press carefully towards the door panel.
The insert is raised slightly.

▷ Remove insert and empty.

Cigarette lighter

Warning!

Risk of fire and burning.

- ▷ Do not leave children in the vehicle unattended.
- ▷ Only hold the heated lighter by the knob.

The cigarette lighter is ready for use regardless of the ignition lock position.

Using the front cigarette lighter

- ▷ Press ashtray lid briefly. Ashtray opens independently.
- ▷ Press lighter into the receptacle (**arrow**). When the element is red hot the lighter jumps back to its initial position.

Using the rear cigarette lighter

- ▷ Briefly press the lid in the centre console. The lid opens independently.
- ▷ Press lighter into the receptacle (**arrow**). When the element is red hot the lighter jumps back to its initial position.

Trailer Hitch

Trailer coupling 243
Trailer coupling with removable ball hitch 245
Electrically folding trailer coupling 251

Trailer coupling

- Please follow the operating instructions for the trailer.
- Do not modify or repair the trailer coupling.

Retrofitting

Have a trailer coupling retrofitted only by a qualified specialist workshop. They are familiar with the manufacturer's specifications and any necessary conversion measures.
We recommend that you use a Porsche partner for this work since these are staffed with trained personnel and have the necessary parts and tools.

Electrical connection

Your Porsche is equipped with a 13-pin plug for the electrical connection to the trailer.
If you wish to tow trailers with a 7-pin plug, an appropriate adapter must be used.

Definitions

The towed weight (gross weight of the trailer) is the sum of the trailer's empty weight and the weight of the load.

The vertical coupling load is the weight that the trailer drawbar exerts on the trailer coupling of the vehicle.

The rear-axle load is the vehicle weight on the rear axle plus the weight of the transported load and the vertical coupling load of the trailer.

The gross weight of the vehicle and trailer is the sum of the weight of the towing vehicle and the weight of the trailer.

- Never exceed the permissible individual weights.

Safety notes!

Driving with a trailer

- Always observe the permissible towed weight, vertical coupling load and rear-axle load. This information is provided in the chapter Technical Data in this Driver's Manual: Please observe the chapter "WEIGHTS" on Page 369.
- When connected, the trailer must always be horizontal behind the towing vehicle. If necessary, use a trailer with an adjustable drawbar.
- When the vehicle is driven in the mountains, the engine output decreases as altitude increases. The maximum weights stated are the values at sea level. The total weight of the vehicle-trailer combination must therefore be reduced by 10 % for each increment of 1,000 metres altitude. Please take this into consideration when planning your route.

Distributing the load

- Distribute the load in the trailer so that heavy objects are as close to the axle as possible. Always safeguard all objects against slipping and tie them down securely.
- You should make the best possible use of the trailer coupling's rated vertical coupling load when loading the trailer, but never exceed it.

Tyre pressure

- ▷ Select the vehicle tyre pressure for full load when towing a trailer.
- ▷ The information on tyre pressure is provided in the chapter Technical Data in this Driver's Manual:
  Please observe the chapter "TYRE PRESSURES, COLD" on Page 367.
- ▷ Check the tyre pressure of the trailer's wheels according to the manufacturer's instructions.

Door mirrors

- ▷ If the width of the trailer obstructs your view of the traffic behind the trailer, you must have additional door mirrors fitted.

Headlights, lights

- ▷ Always check the headlight adjustment before driving with a trailer.
  If necessary, correct with the headlight beam adjustment function.
- ▷ Check whether the plug of the trailer is plugged into the towing vehicle and whether all lights function.

Driving with a trailer

The vehicle with trailer must be used at a speed appropriate to street and traffic conditions, as well as adjusted to the loading situation. Never exceed a speed of **80 km/h (50 mph)**. Excessive speed considering the conditions of use can lead to losing control of the vehicle-trailer combination.

- ▷ Carefully and gradually familiarise yourself with the handling and braking behaviour of the vehicle-trailer combination.
- ▷ Do not drive with the towing vehicle empty and the trailer loaded.
  If this unfavourable condition is unavoidable, please drive especially slowly.
- ▷ Bear in mind the different vehicle handling and size in situations such as braking, parking, cornering and overtaking, etc.
- ▷ The driving stability of the vehicle-trailer combination worsens as the speed increases. Therefore, drive especially slowly on downhill stretches and in the case of unfavourable road and weather conditions (such as wind).
- ▷ Drive in an appropriately low gear on downhill stretches in order to make use of the engine braking effect.
- ▷ Slow down immediately if the trailer starts to sway. Do not countersteer; brake if necessary. Never attempt to straighten out the vehicle-trailer combination by accelerating.
- ▷ Activate the Low Range off-road driving programme when moving off on steep slopes.
- ▷ Under no circumstances may people, animals or objects be in the space between the trailer and towing vehicle when the vehicle is moving.
- ▷ When reversing, bear in mind that ParkAssist is not active.

Maintenance note

- ▷ Please take into consideration that driving with a trailer places much greater stress on all vehicle components. Expert inspection and maintenance after every use are indispensable prerequisites for proper functioning and safety.

Hitching trailer

▷ Always turn off the alarm system before you attach a trailer. The inclination sensor could trigger the alarm unintentionally.

Unhitching trailer

▷ Always turn the alarm system off before uncoupling the trailer, otherwise the alarm will be tripped when the plug is removed.

▷ If the trailer is equipped with an overrun brake, do not unhitch the trailer when its brake is still applied.

Trailer coupling with removable ball hitch

The removable ball hitch is stored in the tool box under the loadspace floor cover.

1. Open and prop up the loadspace floor cover. For information on opening the loadspace floor: Please observe the chapter “OPENING LOADSPACE FLOOR” on Page 223.
2. Open Velco strap of the tool box.
3. Remove the top part of the tool box.
4. Take ball hitch out of the bottom part of the tool box.

Warning!

Danger of injury and risk of damage by flying ball hitch in an accident, during braking and in the case of direction changes.

▷ Do not transport the ball hitch in the vehicle unsecured.

▷ Transport the ball hitch only in the tool box.

Risk of damage to the locking mechanism of the ball hitch, so that safe use of the trailer coupling is no longer ensured.

▷ Never use auxiliary devices or tools to insert or remove the ball hitch.
The ball hitch can be inserted and removed using normal manual force.

Risk of accident if the ball hitch is not properly locked.

▷ Use the trailer coupling only when it is locked and the key has been withdrawn.

Notes on operation

- ▷ Do not modify or repair the ball hitch or mounting tube.
- ▷ Consult a qualified specialist workshop if you experience handling difficulties, notice anything unusual or find any faults.
- ▷ Make sure that the ball hitch is properly locked in place prior to every journey.
- ▷ When driving with a trailer, always lock the lock and withdraw the key.
- ▷ Never unlock the ball hitch when a trailer is still hitched to the vehicle.
- ▷ Always remove the ball hitch and stow it in the tool box when driving without a trailer.
- ▷ Insert the plug into the mounting tube whenever the ball hitch is removed.
- ▷ Important: before using the ball hitch for the first time, write down the number embossed on the key.

Note field for key number .....

Inserting ball hitch

The mount for the ball hitch and the socket are located below the bumper.

A plug in the mounting tube protects it against soiling.

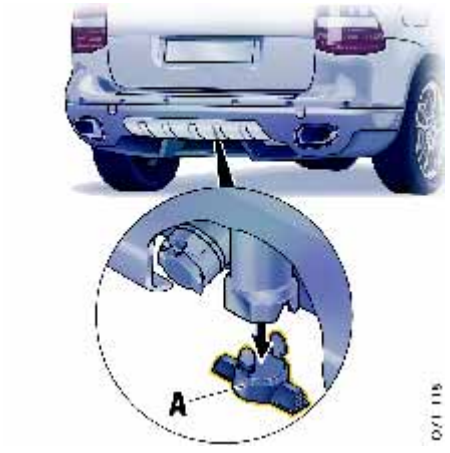

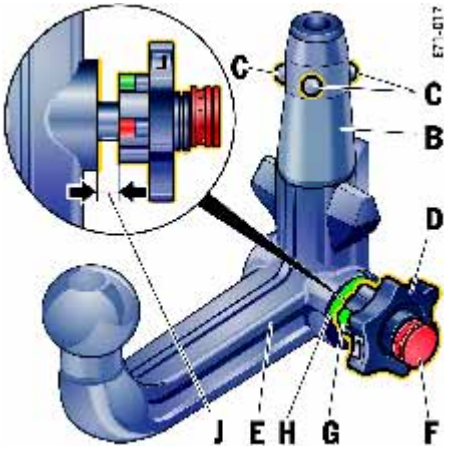

Removing plug

▷ Pull plug **A** out of the mounting tube. Store plug in the tool box.

▷ Before inserting the ball hitch, always check the mounting tube for signs of soiling. In order to ensure that the ball hitch locks securely, it is very important to remove any dirt in the mounting tube.

Preparing the ball hitch

Shank **B**, locking balls **C** and handwheel **D** must not be soiled or damaged.

Ball hitch **E** must be pretensioned for insertion.

Checking whether the ball hitch is pretensioned

– Key **F** must be in the lock, the arrow on the key must point towards the "**lock open**" symbol and the key cannot be withdrawn.

– The red marking **G** on the handwheel must point towards the green area **H** on the ball hitch.

– There must be a clearly visible space between the handwheel and the ball hitch; the gap **J** between handwheel and ball hitch must be around 5 mm.
– It must be possible to press locking balls **C** completely into the shank with their full diameter.

If the ball hitch is not pretensioned, tension it as described below:

▷ The ball hitch must be unlocked, i.e. the arrow on the key must point to the "**lock open**" symbol on the handwheel.

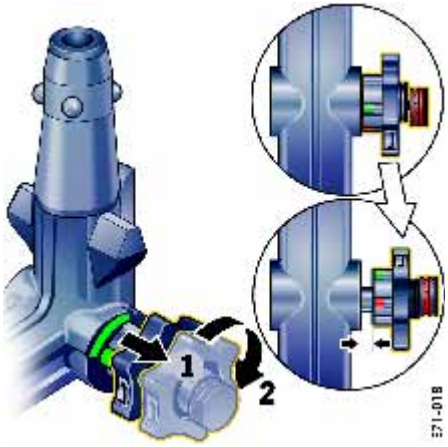

▷ Hold the ball hitch with your left hand.
Pull the handwheel out in **arrow direction 1** with your right hand and then, with the handwheel still pulled out, turn it in **arrow direction 2** until it engages.
The ball hitch has now been pretensioned.

If the ball hitch cannot be pretensioned, it must not be used.

▷ Consult a qualified specialist workshop. We recommend that you use a Porsche partner for this work since these are staffed with trained personnel and have the necessary parts and tools.

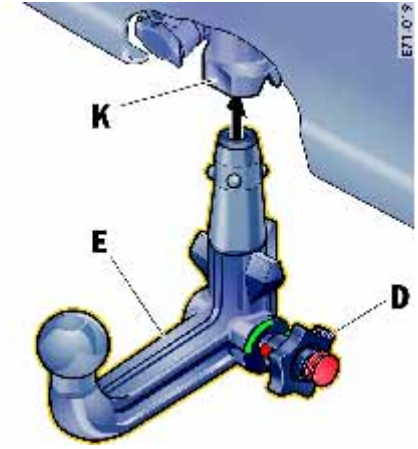

Attaching ball hitch to the vehicle

When inserting ball hitch **E**, do not touch handwheel **D** with your hand. When the ball hitch locks into place, the handwheel rotates back counter-clockwise and comes into contact with the ball hitch again.

1. Insert tensioned ball head **E** into mounting tube **K** in the **direction of the arrow** and push it up firmly until the ball hitch snaps into place.

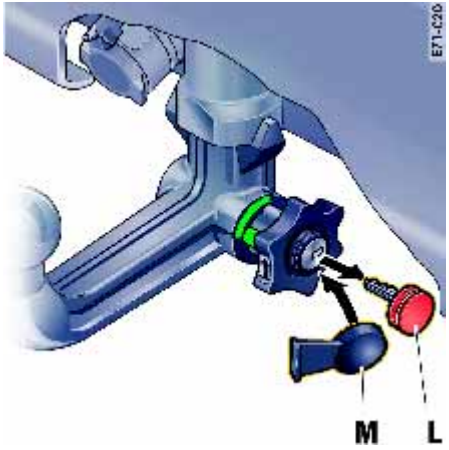

2. Turn key **L** counter-clockwise to lock the ball hitch and then withdraw the key. Once the key has been removed, it must not be possible to pull the handwheel to the side.
3. Cover lock with cap **M**.
4. Store key in the tool box.

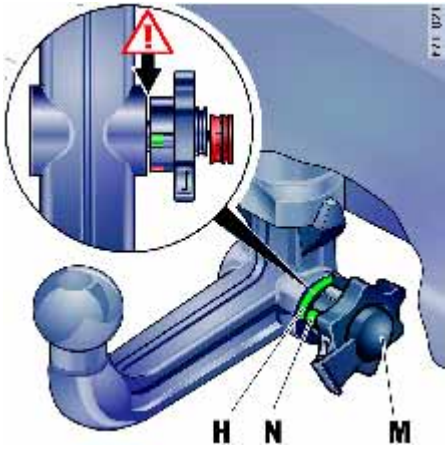

Safety check

You can use the following 4 points to check whether the ball hitch was fitted properly.

Warning!

Risk of accident.

▷ Do not use the trailer coupling if at least one of the 4 points below is not met.
Consult a qualified specialist workshop. We recommend that you use a Porsche partner for this work since these are staffed with trained personnel and have the necessary parts and tools.

1. The green marking **N** on the handwheel must coincide with the green area **H** on the ball hitch.
2. The handwheel must be in contact with the ball hitch.
3. After firmly shaking by hand, the ball hitch must still be securely seated in the mounting tube.
4. The key must have been withdrawn and cap **M** must be in place.

Trailer socket

The socket is located to the left of the inserted ball hitch.

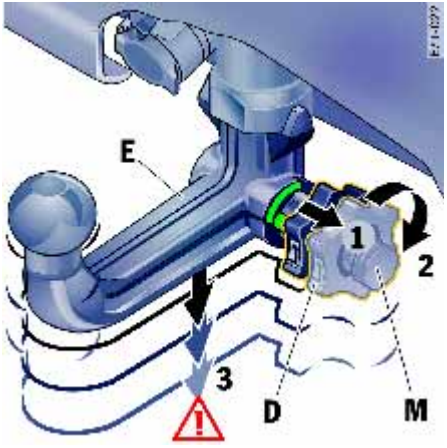

Removing ball hitch

1. Uncap the lock.
   Insert key and turn clockwise to unlock.
   The arrow on the key must point to the "**lock open**" symbol on the handwheel.

Warning!

Danger of injury by the heavy ball hitch.

▷ When removing the ball hitch, hold it in such a way that your hand cannot be pressed onto the road surface.

2. Hold ball hitch **E** with your left hand. Pull handwheel **D** out in **arrow direction 1** and then, with the handwheel still pulled out, turn it as far as it will go in **arrow direction 2**.
   Hold handwheel in this position.
3. Remove ball hitch from the mounting tube in **arrow direction 3**.
   Release handwheel.
   The ball hitch has now been tensioned and can be stowed in the tool box in this state.
4. Always insert the plug into the mounting tube to protect against soiling.

Tip on driving

The ball hitch must always be removed when driving without a trailer.

Care instructions

The ball hitch and mounting tube must be kept clean to ensure proper functioning.

Remove the ball hitch and insert the plug before cleaning the vehicle with a high-pressure cleaner, steam cleaner or similar device.

The ball hitch must not be cleaned with a high-pressure cleaner, steam cleaner or similar device, because this would wash out the lubricating grease inside the ball hitch.

Electrically folding trailer coupling

Warning!

Danger of injury and risk of damage when the ball hitch is extended or retracted.

- ▷ Make sure that no persons, animals or obstacles are in the movement range of the ball hitch.
- ▷ In order to stop the ball hitch movement in the event of danger, touch rocker switch **A** again.
- ▷ Never swivel the ball hitch if a trailer is hitched to the vehicle or a bicycle carrier or similar item is mounted on or supported by the ball hitch.
- ▷ Use the trailer coupling only with the ball hitch fully extended.
- ▷ Never use auxiliary devices or tools to interfere with the movement of the ball hitch. This could damage the locking mechanism. Safe use of the trailer coupling would then no longer be guaranteed.
- ▷ Make sure that the ball hitch is properly locked in place prior to every journey.

Extending trailer coupling

Preconditions

- The vehicle must be stationary.
- The rear lid or rear window must be open.

Extending

- ▷ Press top half of rocker switch **A**.
  The ball hitch automatically extends to operating position.
  The red light-emitting diode in the rocker switch flashes until the ball hitch reaches operating position.

Retracting trailer coupling

Preconditions

- The vehicle must be stationary.
- The rear lid or rear window must be open.
- Trailer must be unhitched.
- The plug (and any adapter) must have been removed from the socket.
- There must not be any items on the ball hitch (e.g. ball protection cap, bicycle carrier, etc.).

Retracting

▷ Press bottom half of rocker switch **A**.
The ball hitch automatically moves to retracted position.
The red light-emitting diode in the rocker switch flashes until the ball hitch reaches retracted position.

Notes on operation

– The ball hitch must be in retracted position when not in use.

– The plug of the trailer, bicycle carrier or similar item must be plugged in when the trailer coupling is in use.

– In order to stop the ball hitch movement in the event of danger, touch rocker switch **A** again. The two red light-emitting diodes in the rocker switch flash rapidly to indicate this interruption. **It is prohibited to use the trailer coupling in this intermediate position.**

▷ A warning appears on the multi-purpose display in the event of malfunctions. For information on warning messages on the multi-purpose display: Please observe the chapter “OVERVIEW OF WARNING MESSAGES” on Page 151.

Trailer socket

The socket is located to the right of the extended ball hitch.
The socket is retracted along with the ball hitch.

Overload protection

When the rocker switch is used in one-touch mode, movement of the ball hitch is interrupted if resistance is encountered. The red light-emitting diode in the rocker switch flashes rapidly to indicate this interruption.

Switching overload protection off

▷ Keep the rocker switch depressed (for at least 2 seconds) until the ball hitch has reached operating or retracted position.

Care instructions

When cleaning the vehicle with a high-pressure cleaner, steam cleaner or similar device, make sure that the cleaning jet does not strike the ball hitch seal directly. Moisture could penetrate.

Faults

▷ Consult a qualified specialist workshop if you experience handling difficulties, notice anything unusual or find any faults.
We recommend that you use a Porsche partner for this work since these are staffed with trained personnel and have the necessary parts and tools.

Storing end positions of the trailer coupling

The end positions of the trailer coupling could be lost after a fault (e.g. when the battery is disconnected and reconnected).

To teach the end positions:

– Press and hold top half of rocker switch **A** until the ball head has reached operating position.

– Press and hold bottom half of rocker switch **A** until the ball head has reached retracted position.

Parking

ParkAssist 254
Swivelling down mirror glass
as parking aid 258
Garage door opener 259

ParkAssist

ParkAssist provides a visual and audible indication to the driver of the distance between the vehicle and an obstacle.

ParkAssist is switched on automatically when the ignition is switched on and remains active up to a speed of approx. 14 km/h (9 mph).

ParkAssist is switched off automatically at higher speeds. ParkAssist is switched on again automatically when the speed drops below approx. 14 km/h (9 mph).

ParkAssist is activated together with the corresponding monitoring range depending on the position of the Tiptronic selector lever or gearshift lever.

– ParkAssist is activated automatically when reverse gear is selected and the ignition is on.

Tiptronic selector lever position:

– **P** – ParkAssist is **not** activated.

– **R, N** – ParkAssist is activated for the front **and** rear areas.

– **D, M** – ParkAssist is activated for the front area.

Gearshift lever position:

– **R** – ParkAssist is activated for the front **and** rear areas.

– **in all other gearshift positions** – ParkAssist is activated for the front area.

Note

On vehicles with manual transmission, ParkAssist is not switched on in the rear area if the vehicle rolls backward without reverse gear engaged.

Warning!

Risk of accident. Even when using ParkAssist, the driver is still responsible for taking appropriate care when parking and when assessing obstacles.

▷ Make sure that no persons, animals or obstacles are within the manoeuvring area.

Switching ParkAssist on and off

▷ Switch ParkAssist on and off using button **A** in the roof console.
When ParkAssist is switched off, the indicator light in the button lights up.

Note on operation

It is recommended to switch off ParkAssist when driving on unpaved surfaces and off-road.

Front ultrasound sensors

Rear ultrasound sensors

Sensors

Six ultrasound sensors in the front and rear bumpers measure the distance to the closest obstacle.

– Range of outer sensors (front and rear): approx. 60 cm

– Range of front middle sensors (**arrow**): approx. 120 cm

– Range of rear middle sensors (**arrow**) (on vehicles **without** spare wheel bracket): approx. 150 cm

– Range of rear middle sensors (on vehicles **with** spare wheel bracket): approx. 120 cm

Obstacles cannot be detected in the “blind” sensor area (above and below the sensors).

Maintenance notes

▷ The sensors must always be kept free of dust, ice and snow in order to ensure that they are fully functional.

▷ Do not damage sensors by abrasion or scratching.

▷ Maintain sufficient distance when cleaning with steam-jet units.
The sensors will be damaged if the pressure is too high.

Note on operation

The rear ultrasound sensors may not function correctly if tyres that have not been recommended by Porsche are fitted on the spare wheel bracket.

If the spare wheel bracket is open, this may impair the function of the rear ultrasound sensors.

On vehicles that have air suspension with level control and height adjustment, the system may not recognise obstacles near the ground at terrain level or special terrain level.

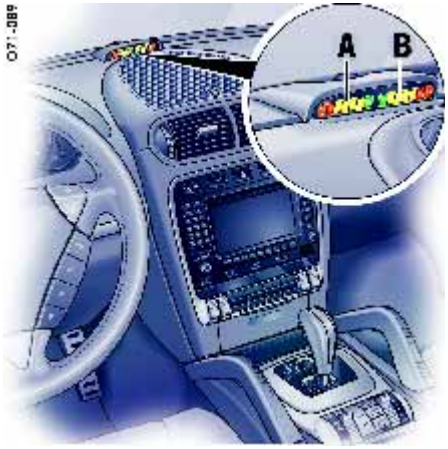

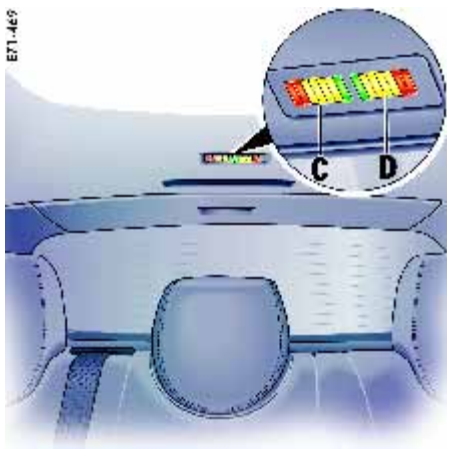

A - *Front display – left monitoring area*
B - *Front display – right monitoring area*

C - *Rear display – right monitoring area*
D - *Rear display – left monitoring area*

Warning indicators, signal tones, distances

The warning indicator for the front area is located on the dashboard.

The warning indicator for the rear area is located in the roof lining at the rear of the vehicle.

The warning indicators for the respective monitoring areas (left and right) are subdivided into one green, 4 yellow and 2 red LED segments.

If ParkAssist is activated, the **green LED segments** of the active warning indicators are lit up continuously.

If the vehicle approaches an obstacle that has been detected by the sensors, one or more of the yellow or red LED segments lights up, depending on the distance to the obstacle.

If the **first yellow LED segment** lights up, the obstacle is still 120 cm (front) or 120 to 150 cm (rear) away.
A brief signal tone sounds when reversing.

An **intermittent tone** sounds when the distance becomes less than approx. 60 cm. The **fourth yellow LED segment** lights up.

If the distance becomes less than approx. 25 cm (on vehicles with trailer coupling: approx. 35 cm), a **continuous tone** sounds. The **second red LED segment** lights up.

▷ Set the radio volume so that the signal tones are not drowned out.

You can have the volume of the signal tones adjusted to your own requirements.

▷ Consult a qualified specialist workshop. We recommend that you use a Porsche partner for this work since these are staffed with trained personnel and have the necessary parts and tools.

Note on operation

If the obstacle is approached even closer after the continuous tone sounds and the second red LED segment lights up, the system may not be able to recognise the obstacle any longer.

Limits of ultrasonic measurement

- ParkAssist cannot detect sound-absorbing obstacles (e.g. powdery snow),
- sound-reflecting obstacles (e.g. glass surfaces, flat painted surfaces),
- and very thin obstacles.

Other sources of ultrasound (e.g. pneumatic brakes of other vehicles and jackhammers) may interfere with detection of obstacles.

Fault indication without warning tone

All red LED segments of the active warning indicators light up when there is a **temporary fault** in ParkAssist as a result of other ultrasound sources.

Note

Correct operation is no longer guaranteed if there is a temporary fault (e.g. caused by ice formation or heavy soiling on the sensors).

The system detects the temporary fault. All LED segments light up until a speed of 14 km/h (9 mph) is reached.
ParkAssist is ready for operation again when the interference is no longer present.

Fault indication with warning tone

In the event of a **permanent fault** in ParkAssist, the red LED segments of the active warning indicators light up **and** a continuous tone sounds for three seconds after a transmission range has been selected.

Possible causes

- Defect or system fault.

▷ Switch ParkAssist off.
When ParkAssist is switched off, the indicator light in the button lights up.
Please observe the chapter “SWITCHING PARKASSIST ON AND OFF” on Page 254.

▷ Have the fault remedied. Consult a qualified specialist workshop. We recommend that you use a Porsche partner for this work since these are staffed with trained personnel and have the necessary parts and tools.

Driving with a trailer

The ParkAssist rear monitoring area is switched off when the trailer’s power supply is plugged in.

A - *Control switch for door mirror adjustment*
C - *Passenger mirror adjustment*

Swivelling down mirror glass as parking aid

When reverse gear is engaged, the mirror on the **passenger's side** swivels down slightly to show the kerb area.

Preconditions

– Vehicle must be equipped with seat memory.
– Control switch **A** must be turned to position **C** (passenger mirror adjustment).
– Reverse gear must be engaged.

Moving mirror to its initial position

The mirror swivels back to its initial position when:

– The vehicle is shifted out of reverse gear **or**
– The position of the control switch for door mirror adjustment is changed.

A - *Programmable keypad*
B - *Light-emitting diode for status identification*

Garage door opener

The garage door opener of your Porsche replaces up to three original hand-held transmitters used to operate various devices (e.g. garage door, gate to the property, alarm system).

You have the option of assigning up to 3 different signals to the keys on keypad **A**.

Warning!

Risk of accident when using the garage door opener if persons, animals or objects are within the range of movement of the equipment that is being operated.

- ▷ When using the garage door opener, ensure that no persons, animals or objects are within the range of movement of the equipment that is being operated.
- ▷ Observe the safety notes for the original hand-held transmitter.

Notes on operation

- ▷ Always use the garage door opener in the direction of travel.
  Otherwise, range restrictions cannot be ruled out.
- ▷ Before selling the vehicle, delete the programmed signals of the garage door opener on the keypad.
- ▷ Please read the instructions for the original hand-held transmitter to find out whether the original transmitter is equipped with fixed or changeable code.

Deleting programmed signals from the keys

This process deletes the standard codes set at the factory. Do not repeat this process if you would like to assign additional signals to the keys.

- ▷ Keep the two outer buttons of keypad **A** depressed for approximately 20 seconds until light-emitting diode **B** begins to flash.

Assigning garage door opener signal to key with fixed code system

1. Please follow the operating instructions for the original hand-held transmitter.
2. The standard codes set at the factory must be deleted before programming for the **first** time.
3. Point the original transmitter at the marked position.
4. Press the button of the original hand-held transmitter and the button to be allocated on the keypad simultaneously (**see illustration**).
5. Keep both buttons depressed until light-emitting diode **B** starts to flash (first slowly and then quickly).
   Only release both buttons when light-emitting diode **B** flashes quickly.
   The rapidly flashing light-emitting diode **B** confirms that the new signal has been programmed successfully.
6. Repeat steps 3 to 5 to assign signals to the other buttons.

Assigning garage door opener signal to key with changeable code system

1. Please follow the operating instructions for the original hand-held transmitter.
2. The standard codes set at the factory must be deleted before programming for the **first** time.
3. Point the original transmitter at the marked position.
4. Press the button of the original hand-held transmitter and the button to be allocated on the keypad simultaneously.
5. Keep both buttons depressed until light-emitting diode **B** starts to flash (first slowly and then quickly).
   Only release both buttons when light-emitting diode **B** flashes quickly.
   The rapidly flashing light-emitting diode **B** confirms that the new signal has been programmed successfully.
6. To synchronise the system:
   Press the programming button on the receiver for the garage door drive.
   Afterwards, you usually have approx. 30 seconds to initiate step 7.
7. Press the button to be assigned on the keypad twice (for some devices you must press the key on the keypad a third time to complete the setting process).
8. Repeat steps 3 to 7 to assign signals to the other buttons.

Note

▷ Please consult a Porsche partner if you have not been able to successfully assign signals to the buttons even though you have carefully followed the instructions in this chapter and the operating instructions for the original hand-held transmitter. Your Porsche Partner has a list of all garage door opener signals that can be taught.

Reprogramming an individual button of keypad A

1. Press the button of keypad **A** to be reprogrammed. Do not release the buttons before step 4 is executed.
2. When the light-emitting diode **B** flashes slowly (after approximately 20 seconds), point the original transmitter at the position marked.
3. Press the button of the original hand-held transmitter and keep it depressed.
4. The light-emitting diode **B** first flashes slowly and then more quickly.
   Only release both buttons when light-emitting diode **B** flashes quickly.

Operating the garage door opener

▷ Press the corresponding button on keypad **A**. Light-emitting diode **B** lights up during signal transfer.

Alarm System and Theft Protection

Alarm system 263
Immobiliser 265
Steering column lock 265
Theft protection 265

Alarm system

The alarm system monitors the following alarm contacts:

– Alarm contacts in doors, rear lid, rear window and engine compartment lid.

– Passenger compartment monitoring system: Movement in the interior when the vehicle is locked (e.g. attempted theft after breaking window).

– Inclination sensor: Tilting of the vehicle (e.g. attempt to tow away the vehicle)

If one of these alarm contacts is interrupted, the alarm horn sounds for approx. 30 seconds and the hazard warning lights flash.
After 5 seconds of interruption, the alarm is triggered again. This cycle is repeated ten times.

You can temporarily deactivate the passenger compartment monitoring system and inclination sensor separately on the multi-purpose display in the instrument panel.

▷ Please observe the chapter “SWITCHING OFF PASSENGER COMPARTMENT MONITORING AND INCLINATION SENSOR ON THE MULTI-PURPOSE DISPLAY” on Page 144.

Switching on

▷ The alarm system is activated when the vehicle is locked.

Switching off

▷ The alarm system is deactivated when the vehicle is unlocked.

Note on operation

▷ If you unlock the vehicle with the key in the door lock, you must switch the ignition on (ignition lock position **1**) within 15 seconds of opening the door in order to prevent the alarm system from being triggered.

Switching off the alarm system if it is triggered

▷ Unlock vehicle doors with the remote control **or**

▷ Switch ignition on.

Switching off passenger compartment monitoring system and inclination sensor

If people or animals are remaining in the locked vehicle or the vehicle is being transported on a train or ship, for example, the passenger compartment monitoring system and inclination sensor must temporarily be switched off.

Inform any persons remaining in the vehicle that the alarm system will be triggered if the door is opened.

Note on operation

When locked again, the passenger compartment monitoring system and inclination sensor are activated once more.

The passenger compartment monitoring system and inclination sensor remain switched off if:

– You switched off the passenger compartment monitoring system and inclination sensor when you last locked the vehicle **and**

– The vehicle was automatically locked 30 seconds after unlocking because no door was opened.

On vehicles without Porsche Entry & Drive

▷ Quickly press button 🔒 of the remote control **twice**.
The hazard warning lights flash four times.
The doors are locked but can be opened from the inside.

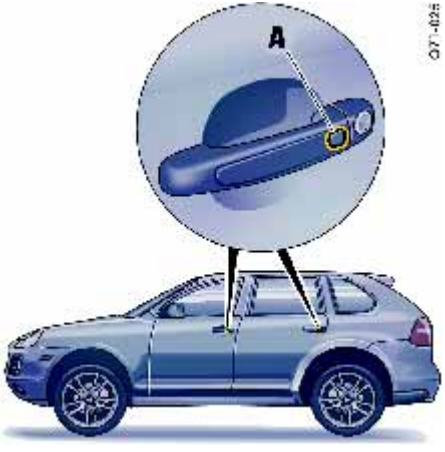

On vehicles with Porsche Entry & Drive

▷ Press button **A** in the door handle **twice** quickly.
The hazard warning lights flash four times.
The doors are locked but can be opened from the inside.

Opening doors from inside

1. Pull inner door handle once.
   Door lock is unlocked.
2. Pull inner door handle again.
   Door can be opened.

A *- Light-emitting diode for alarm system – example: driver's door*

Function indication

The locking condition of the vehicle is indicated by the light-emitting diodes **A** in the front doors flashing at different frequencies.
The light-emitting diodes go out when the vehicle is unlocked.

The passenger compartment monitoring system and inclination sensor are switched on.

– The light-emitting diodes flash rapidly for 2 seconds, then slowly.

The passenger compartment monitoring system and inclination sensor are switched off.

– The light-emitting diodes flash rapidly for 2 seconds, go out for 28 seconds, and then flash slowly.

Faults in the central locking system and the alarm system

The light-emitting diodes flash rapidly for 2 seconds, light for 28 seconds, and then flash slowly.

Avoiding false alarms

▷ If people or animals are remaining in the locked vehicle or the vehicle is being transported on a train or ship, for example, the passenger compartment monitoring system and inclination sensor must temporarily be switched off.

▷ Always close the sliding/lifting roof or the Panorama roof system and all door windows.

▷ Do not leave a mobile phone switched on in the glasses case of the roof console.

▷ Always turn off the alarm system before you attach or uncouple a trailer. The alarm system could trigger an alarm unintentionally.

Immobiliser

There is a transponder (an electronic component), containing a stored code, in each key.
Before the ignition is switched on, the ignition lock checks the code.

The immobiliser can be deactivated and the engine started only using an authorised ignition key.

Key:

Switching off the immobiliser

▷ Insert the ignition key into the ignition lock.

Switching on the immobiliser

▷ Remove ignition key.

Porsche Entry & Drive:

Switching off the immobiliser

▷ Switch ignition on.

Switching on the immobiliser

▷ Switch ignition off.

Steering column lock

Vehicles without Porsche Entry & Drive

The steering column is **automatically locked** when the ignition key is withdrawn from the ignition lock.

The steering column is **automatically unlocked** when the ignition key is inserted into the ignition lock.

Vehicles with Porsche Entry & Drive

The steering column is **automatically locked** when the ignition is switched off and the vehicle is locked.

Manually locking the steering column on vehicles with Porsche Entry & Drive

▷ Depress the clutch on vehicles with manual transmission.

▷ Once the ignition is switched off, turn the control unit again to ignition lock position **3** and hold it there for **2 seconds**.
The steering column is locked.

The steering column is **automatically unlocked** by turning the control unit from ignition lock position **0**.

Theft protection

When leaving the vehicle, you should always:

▷ Close all door windows,

▷ Close sliding/lifting roof or Panorama roof system,

▷ Withdraw ignition key (switch ignition off on vehicles that have Porsche Entry & Drive),

▷ Lock the glove compartment,

▷ Close oddment trays,

▷ Remove valuables, vehicle registration documents, telephone and house keys from the car,

▷ Cover luggage compartment with the luggage compartment cover,

▷ Close rear lid and rear window and

▷ Lock the doors.

Maintenance and Car Care

Notes on maintenance 267
Checking the engine oil level 268
Topping up engine oil..... 269
Checking the coolant level
and adding coolant 271
Checking brake fluid level
and changing brake fluid 273
Adding washer fluid..... 274
Changing air cleaner 275
Changing particle filter 275
Power steering 275
Wiper blades 276
Emission control system 279
Fuel can.....279
Filling with fuel.....280
Car care instructions.....282

Notes on maintenance

We recommend a Porsche partner for this work. Experienced, Porsche trained workshop personnel, supplied with the latest information as well as special tools and equipment are prerequisites for looking after your Porsche properly.

If, however, you work on your vehicle yourself, you must do it with great care. Only in this way is operational reliability fully guaranteed.

Unskilled maintenance work performed during the guarantee period may cause you to lose your claims.

Danger!

Risk of death, injury and fire during maintenance work.

- ▷ Do not smoke in the vicinity of the battery or fuel system, and do not use a naked flame.
- ▷ Only work on the vehicle in the open or in well-ventilated spaces.
- ▷ Take care when working near hot engine parts and parts of the exhaust system.
- ▷ Before working in the engine compartment, always switch the engine off and let it cool sufficiently.
- ▷ If you have to work on the engine while it is running, always apply the parking brake **and** put the gearshift lever in neutral or the Tiptronic selector lever in position **P**.
- ▷ Take great care to ensure that hands, fingers, articles of clothing (e.g. ties, sleeves), necklaces or long hair cannot be caught up by the radiator fans, drive belt or other moving parts.
- ▷ Exercise extreme caution when working in the area of the radiator fans.
  The radiators and radiator fans are in the front of the vehicle.
  The fans can start running as a function of temperature, even with the engine switched off.
- ▷ When the ignition is on, all cables and wires of the ignition system carry a high voltage. Special care is therefore required.
- ▷ Always place the vehicle on stable supports if work has to be carried out under the vehicle. The car jack is not suitable for this.

  For information on raising vehicles with air suspension with level control and height adjustment:
  Please observe the chapter “RAISING VEHICLE WITH THE JACK” on Page 205.
- ▷ Refill fluids, e.g. engine oil, washer fluid, brake fluid or coolant, are hazardous to health. Store refill fluids out of reach of children and dispose of these fluids properly.

Checking the engine oil level

▷ Check the oil level regularly. It is best to do this when refuelling and before extended journeys.

▷ Please observe the chapter “NOTES ON MAINTENANCE” on Page 267.

Oil-level warning

If the oil level is too low, this is indicated by the oil-warning light lighting up on the multi-purpose display.

▷ Check the oil level using the oil dipstick as soon as possible and add engine oil if necessary.

▷ For information on warning messages on the multi-purpose display: Please observe the chapter “OVERVIEW OF WARNING MESSAGES” on Page 151.

Note on operation

If the engine compartment lid is opened and oil is not added, the warning message appears again after approximately 100 km (62 miles).

⚠ Warning!

Risk of injury. The radiator fans can start running as a function of temperature, even with the engine switched off.
Risk of burning from hot parts in engine compartment.

▷ Exercise extreme caution when working on the engine compartment.

Preconditions for measuring the oil level correctly

– Vehicle must be level.

– Engine must be switched off and at operating temperature.

– Before the oil-level measurement, allow the engine oil to flow back into the oil pan for around 3 minutes.

Checking oil level with the oil dipstick

1. Pull out the oil dipstick and wipe it with a clean, lint-free cloth.
2. Push oil dipstick fully home, withdraw again and read off the oil level.
   The oil level must never fall below or exceed the MIN and MAX marks on the dipstick.
   The difference between the marks is approx. 1.5 litres.
3. Push oil dipstick in as far as the stop.

Cayenne S oil dipstick

MAX marking

▷ Do not top up engine oil.

MIN marking

▷ Top up engine oil immediately.

Cayenne oil dipstick

MAX marking

▷ Do not top up engine oil.

A – Normal marking

▷ Engine oil can be topped up.

MIN marking

▷ Top up engine oil immediately.

Topping up engine oil

Porsche recommends Mobil 1.

Always observe the following points:

– Use only **non-seasonal light-running oils in accordance with the Porsch approval list** which are suitable for the respective temperature range (see “Oils for the correct temperature range”).
This is a precondition for optimum and problem-free operation of your vehicle.

– Use of these Porsche-approved oils is also a precondition for the **2 year/30,000 km service intervals** of the Cayenne.

Note for Cayenne (V6)

Using fuels in accordance with Euro standard EN 228 **and** using an engine oil from the Porsche approval list for Cayenne (V6) are requirements for the 2 year/30,000 km service intervals.

– You will find a sticker in the engine compartment which provides information (manufacturer) about the first filling of your engine.

– Generally you can find the manufacturer suggestions on the oil containers or as a bulletin on the market.

▷ Do not mix oil additives with your engine oil.

▷ Always use the same oil type if possible. Do not mix oils.

▷ Regular oil changes are part of servicing.

Change the oil more frequently in dusty regions.

Your Porsche partner will be pleased to advise you.

The right oil for every temperature range

	Oil type	Use[1)]
Cayenne (V6):	SAE[2)] 0W - 30 and 0W - 40	For all temperature ranges.
Cayenne S:	SAE[2)] 0W - 40, 5W - 40 and 5W - 50	Above –25 °C
	SAE[2)] 0W - 40	Below –25 °C

1. Use with Porsche approval
2. SAE viscosity class - Example: SAE 0W - 30
Specification 0W = Viscosity specification for low temperatures (winter).
Specification 30 = Viscosity specification for high temperatures.

Engine oil filling point on Cayenne S

Engine oil filling point on Cayenne

Caution!

Fire hazard if engine oil comes into contact with hot engine parts.
Risk of damage if engine oil comes into contact with the drive belt.

▷ Exercise great care when adding engine oil.

1. Unscrew cap of the oil filler opening.
2. Pour in oil carefully, in half-litre steps at most, and measure the oil level again after each step after waiting for a few minutes.
   Never exceed the MAX mark on the oil dipstick.
3. Push in the oil dipstick as far as the stop when the correct oil level is reached.
4. Carefully close cap of the oil filler opening.

Checking the coolant level and adding coolant

The coolant provides year-round protection from corrosion and freezing down to –35 °C.
(Nordic countries –40 °C).

Observe the following points:

▷ Use only antifreeze authorised by Porsche.

▷ Check the coolant level regularly.

When the **engine is cold** and the car is level, the coolant level must be between the minimum and maximum marks.

▷ For further important information on “service topics”: Please observe the chapter “NOTES ON MAINTENANCE” on Page 267.

The expansion tank for the coolant is located in the engine compartment under the engine compartment cover.

Checking when engine is cold

1. Remove cover.
2. Open cap of the expansion tank carefully and allow any overpressure to escape.
   Then unscrew cap completely.
3. Read the coolant level.
4. Top up with coolant if necessary.
   Do not exceed the max. mark.
   Only add a mixture of antifreeze and water in equal parts.
   Antifreeze share in coolant:
   50 % provides antifreeze protection down to –35 °C.
5. Screw the cap closed firmly and put on the cover.

Checking the coolant level when a warning message is shown on the multi-purpose display of the instrument panel

Warning!

Risk of scalding from hot coolant.

▷ Take great care when opening the cap of the expansion tank when the engine is hot.

1. Remove cover.
2. If the engine is hot, cover the expansion tank cap with a cloth.
   Open cap carefully and allow any overpressure to escape.
   Then unscrew cap completely.
3. Read the coolant level.
   Top up with coolant if necessary.
   Only add a mixture of antifreeze and water in equal parts.
   Antifreeze share in coolant:
   50 % provides antifreeze protection down to –35 °C.
   Do not exceed the max. mark.

Note on operation

▷ If the coolant level exceeds the max. mark when the engine is hot, check the coolant level again when the engine is cold.

4. Screw the cap closed firmly and put on the cover.
5. Have the cooling system checked.
   Consult a qualified specialist workshop. We recommend that you use a Porsche partner for this work since these are staffed with trained personnel and have the necessary parts and tools.

Maintenance notes

If pure water is added in an emergency, the mixing ratio will have to be corrected.
Marked loss of coolant indicates leakage in the cooling system.

▷ The cause must be eliminated without delay. Consult a qualified specialist workshop. We recommend that you use a Porsche partner for this work since these are staffed with trained personnel and have the necessary parts and tools.

Radiator fans

The radiators and radiator fans are in the front of the vehicle.

Warning!

Risk of injury. The fans can start running as a function of temperature, even with the engine switched off.

▷ Exercise extreme caution when working in the area of the radiator fans.

Checking brake fluid level and changing brake fluid

- ▷ Only use genuine Porsche brake fluid or a brake fluid of similar quality which has been manufactured according to Porsche specifications and product requirements.
- ▷ For further important information on “service topics”: Please observe the chapter “NOTES ON MAINTENANCE” on Page 267.

⚠ Warning!

Brake fluid is toxic and attacks paintwork and other surfaces.

- ▷ Store brake fluid out of reach of children.
- ▷ Immediately rinse off spilled brake fluid with clean water.
- ▷ If brake fluid gets into your eye, immediately rinse with clean water for a few minutes. Then see a doctor immediately.
- ▷ Please note all the information on the refill container of the brake fluid.

Checking the brake fluid level

The reservoir for the hydraulic braking system is located in the engine compartment.

1. Rotate the turn-locks 90° counter-clockwise (**arrow**) with a screwdriver and remove the lid.
2. Check the brake fluid level at the transparent reservoir.
   The fluid level should always be between the MIN and MAX marks.

A slight decrease in the fluid level due to wear and automatic readjustment of the disc brakes is normal.
However, if the fluid level falls markedly or below the minimum mark, the braking system may have developed a leak.

- ▷ Have the braking system checked immediately. Consult a qualified specialist workshop. We recommend that you use a Porsche partner for this work since these are staffed with trained personnel and have the necessary parts and tools.

Changing the brake fluid

Brake fluid absorbs moisture from the air over time. The absorbed water can impair braking efficiency.

▷ Therefore, have the brake fluid changed in accordance with the change intervals stated in the booklet “Guarantee and Maintenance”.

Warning light and warning message

The warning light on the instrument panel and the warning message on the multi-purpose display of the instrument panel

– indicate that the brake fluid level is too low.

– could indicate a braking circuit failure if the brake pedal travel is greater than normal.

Note on operation

If the warning lights should light up while driving:

▷ Stop immediately in a suitable place.

▷ Do not continue driving.
Consult a qualified specialist workshop. We recommend that you use a Porsche partner for this work since these are staffed with trained personnel and have the necessary parts and tools.

Adding washer fluid

A **warning message** is shown on the multi-purpose display of the instrument panel if the washer fluid level is too low.
In this case, the remaining quantity is only around 0.8 litre.

▷ Add washer fluid at the next opportunity.

The maximum capacity is approx. 7.5 litres.

Observe the following points:

▷ Depending on the season, mix the water with the appropriate additives (window cleaner concentrate, antifreeze) in the correct mixture ratio.

Summer filling with water + window cleaner concentrate in the mixture ratio specified on the container.

Winter filling with water + antifreeze + window cleaner concentrate in the mixture ratio specified on the container.

Always follow all the instructions on the containers of the additives used.

▷ Only use window cleaner concentrate which meets the following requirements:

– Dilutability 1:100,

– Phosphate-free,

– Suitable for plastic headlights.

We recommend window cleaner concentrates approved by Porsche. Your Porsche partner will be pleased to advise you.

The washer fluid reservoir for windscreen, rear window and headlights is located in the engine compartment.

1. Open cap of washer fluid reservoir.
2. Add washer fluid.
3. Close cap carefully.

Changing air cleaner

Regular replacement of the filter element is part of servicing.

▷ In dusty conditions, clean the filter element more frequently and replace if necessary.

For further important information on “service topics”: Please observe the chapter “NOTES ON MAINTENANCE” on Page 267.

Changing particle filter

Regular replacement of the filter is part of servicing.

A dirty filter can be the cause of reduced air throughput.

▷ Have the filter replaced.
Consult a qualified specialist workshop. We recommend that you use a Porsche partner for this work since these are staffed with trained personnel and have the necessary parts and tools.

Note on operation

The particle filter ensures that the fresh air entering the passenger compartment is virtually free of dust and pollen.

▷ If the outside air is polluted by exhaust fumes, press the circulating-air button.

Power steering

⚠ Warning!

Risk of accident. When the engine is stationary (e.g. when the car is on tow) or the hydraulic system fails, there is no power assisted steering.
Therefore, substantially more force will have to be exerted in order to steer.

▷ Exercise great care when on tow.

▷ Have the fault remedied. Consult a qualified specialist workshop. We recommend that you use a Porsche partner for this work since these are staffed with trained personnel and have the necessary parts and tools.

The flow noise heard at full steering lock is design-related and does not indicate a defect in the steering system.

Checking and adding hydraulic fluid

Observe the following points:

▷ Only use genuine Porsche hydraulic fluid or a hydraulic fluid of similar quality which has been approved according to Porsche specifications and product requirements.

▷ Check the fluid level with the engine stopped and cold (engine temperature approx. 20 °C).

1. Remove cover **A**.

2. Open the reservoir cap.
3. The fluid level should be between the MIN and MAX marks on the dipstick.
4. Add hydraulic fluid if necessary.
5. Close cap carefully.
6. Put on cover **A**.
7. Close engine compartment lid.

Note on operation

▷ If the fluid level drops significantly, please have the cause remedied immediately.
Consult a qualified specialist workshop. We recommend that you use a Porsche partner for this work since these are staffed with trained personnel and have the necessary parts and tools.

Wiper blades

Maintenance notes

Wiper blades that are in perfect condition are vital for a clear view.

▷ Replace the wiper blades twice per year (before and after the cold season) or if wiper performance deteriorates or the blades are damaged.

▷ For important information on “service topics”: Please observe the chapter “CAR CARE INSTRUCTIONS” on Page 282.

Caution!

Risk of damage if wiper arm accidentally falls back onto the windscreen.

▷ Always hold the wiper arm securely when replacing the wiper blade.

Risk of damage if wiper blades that are frozen in place are loosened improperly.

▷ Thaw the wiper blades before loosening them.

Risk of damage.
If the wiper blades are not changed properly, they can come loose when the car is moving.

▷ Check whether the wiper blades are seated securely.
The wiper blade must be pushed onto the wiper arm up to the stop.

▷ Periodically clean the wiper blades with window cleaner, especially after the vehicle has been washed in a car wash.
We recommend the Porsche window cleaner. If they are very dirty (e.g. with insect remains), they can be cleaned with a sponge or cloth.

If the wiper blades rub or squeak, this may be as a result of the following:

– If the vehicle is washed in an automatic car wash, wax residues may adhere to the windscreen. These wax residues can be removed only by using window cleaner concentrate.

▷ Please observe the chapter “ADDING WASHER FLUID” on Page 274.

Please contact your Porsche partner for further information.

– The wiper blades may be damaged or worn.

▷ Replace damaged wiper blades as soon as possible.

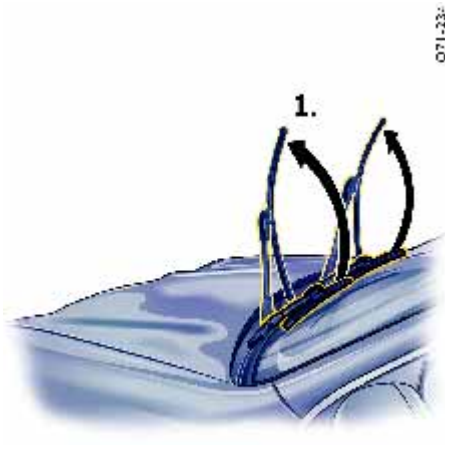

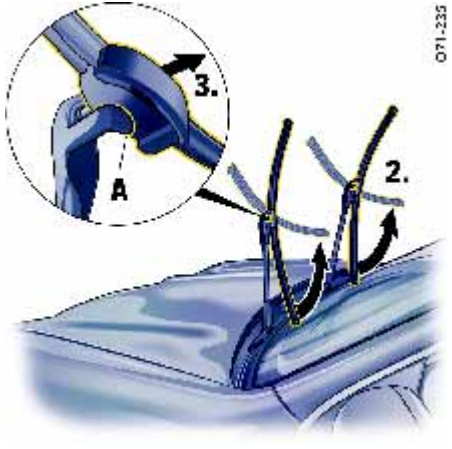

Replacing windscreen wiper blades

▷ Apply the parking brake.

▷ Switch the wipers off (wiper switch in position **0**).

▷ Switch ignition off.

1. Fold windscreen wiper arm away from the windscreen (**arrow 1**).
2. Turn wiper blade at right angles (**arrow 2**) so that the fixing groove of the wiper blade is released by the retaining clip **A**.
3. Pull off wiper blade towards the windscreen (**arrow 3**).
4. Push on new wiper blade.

   Make sure that the wiper blade is pushed onto the wiper arm up to the stop.

5. Fold wiper blade back to its original position.

   Make sure that the retaining clip **A** engages fully in the fixing groove of the wiper blade.

6. Carefully fold wiper arm back onto the windscreen (**arrow**).

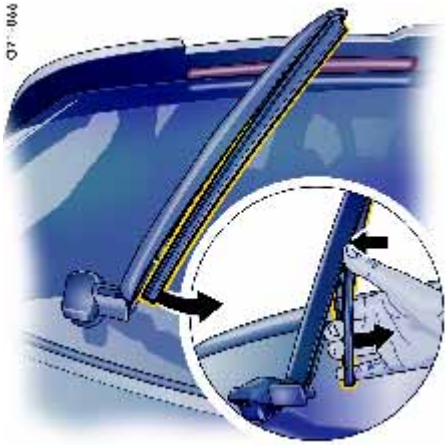

Changing rear window wiper blade

1. Apply the parking brake.
2. Switch ignition off.
3. Carefully fold the wiper arm away from the rear window until it reaches its locking position (approx. 60°).
4. Carefully unclip the wiper blade from the wiper arm (**arrow**).
   Hold the wiper arm with your other hand when doing this.
5. Push the new wiper blade onto the centre of the wiper arm and snap it into place.
6. Carefully fold wiper arm back onto the rear window.

Emission control system

To ensure the efficiency of the emission control system (three-way catalytic converter, oxygen sensor and electronic control unit),

– observe the service intervals,

– use **only unleaded fuel**.

Tip on driving

Faulty preparation of the fuel/air mixture can cause the catalytic converters to overheat and can destroy them.

Warning!

Risk of damage to emission control system.

▷ Avoid frequent and prolonged use of the starter if the engine does not start.

▷ If misfiring occurs while driving (identifiable by rough running of the engine or loss of power), have the fault remedied immediately.
Consult a qualified specialist workshop. We recommend that you use a Porsche partner for this work since these are staffed with trained personnel and have the necessary parts and tools.

▷ Avoid high cornering speeds after the fuel-level warning light lights up.

▷ Never drive the tank dry.

For information on tow-starting or push-starting the vehicle:
Please observe the chapter “TOWING AND TOW-STARTING” on Page 356.

Risk of fire in the area of the exhaust system.

▷ Do not apply additional undersealing or rust protection agent on or near the exhaust manifolds, exhaust pipes, catalytic converters or heat shields.
The protective material could overheat and ignite while you are driving.

▷ Do not drive or park your vehicle where combustible materials, such as dry grass or leaves, can come into contact with the hot exhaust system.

Fuel can

Danger!

Risk of fire or explosion if the fuel can is damaged in an accident and fuel escapes. Escaping vapours can be harmful to health.

▷ Do not carry a fuel can on journeys.

▷ Observe the relevant laws.

Filling with fuel

When the ignition is on, the fuel level is displayed on the instrument panel.

▷ For further information on this:
Please observe the chapter “FUEL GAUGE” on Page 122.

⚠ Warning!

Fuel is highly flammable and harmful to health.

▷ Fire, naked flame and smoking are prohibited when handling fuel.

▷ Avoid contact with skin or clothing.

▷ Do not inhale fuel vapours.

To avoid permanent damage to the functionality of the catalytic converters and oxygen sensors, use **only unleaded fuel.**

The engine is designed to provide optimum performance and fuel consumption if **unleaded premium fuel with 98 RON/88 MON** is used.

If unleaded premium fuels with octane numbers of **at least 95 RON/85 MON** are used, the engine’s knock control automatically adapts the ignition timing.

▷ Never drive the tank dry.

Note on operation

Information on the fuel quality is normally provided on the petrol pump.
If this should not be the case, ask a petrol station attendant.

If the recommended fuel is not available, you can also use unleaded regular fuel (91 RON/82.5 MON) in an emergency.

However, this could reduce performance and increase fuel consumption.

▷ Avoid driving at full throttle.

In some countries the available fuel quality may not meet requirements, and this can lead to coking in the area of the intake valve.

In this case, the fuel may be mixed with the additive sold and recommended by Porsche after consulting a Porsche partner.

Porsche part number 000 043 206 89.

▷ Observe the instructions and mixture ratios provided on the container.

1. Stop the engine and switch off the ignition.
2. Open the filler flap by pressing on the rear part of the filler flap (**arrow**). The vehicle must be unlocked.

3. Slowly unscrew the tank cap.
   Hang the tank cap on the filler flap by its plastic strap **A**.
4. Add the fuel additive recommended by Porsche if necessary.
5. Fully insert the pump nozzle in the filler neck.
   The handle of the pump nozzle must point downwards.
   The maximum filling capacity is approx. 100 litres, including approx. 12 litres reserve
6. Operate the pump nozzle and refuel the vehicle.

Note on operation

Do not add further fuel once the correctly operated automatic pump nozzle has switched off. Fuel could spray or could run over when heated.

7. Replace the tank cap immediately after refuelling and turn it until you hear it and feel it engage.
8. Close the filler flap and press on the rear of the filler flap (**arrow**) until it can be felt to engage.

Maintenance note

If you lose the tank filler cap, you must replace it with an original part only.

Emergency unlocking of filler flap

If the electrical unlocking mechanism is faulty, the filler flap can be opened as follows:

1. Remove lid of right side storage compartment.
2. Pull emergency release **A** in the **direction of the arrow**.
   The filler flap pops open.

Car care instructions

Regular, skilled care helps to maintain the value of your Porsche and can be a precondition for the upholding of claims under the vehicle guarantee and warranty.

You can obtain suitable care products at your Porsche partner, individually or as a complete set.

▷ Follow the instructions for use on the packaging of care products.

▷ Keep care products out of reach of children.

▷ If necessary, dispose of these fluids properly.

To ensure that the vehicle's condition is expertly checked and that the warranty remains valid for the full period, every Porsche partner will inspect the level of care of the car and record the results in writing. For this purpose, the Porsche partner will issue a Condition Report and also certify this in the "Guarantee and Maintenance" booklet under "Long-life Guarantee Condition Report".

High-pressure cleaning units

⚠ Warning!

High-pressure cleaning units can damage the following components:

– Tyres,

– Logos, emblems,

– Painted surfaces,

– Widened wings,

– Lock and latch of the removable towing attachment,

– Seals of the electrically retractable ball hitch,

– Generator, valve covers,

– ParkAssist sensors.

▷ Please observe the operating instructions from the unit manufacturer.

▷ Always cover the lid of the brake fluid reservoir prior to cleaning. Never point the cleaning jet directly at the lid.

▷ When cleaning with a flat-jet nozzle or a so-called "dirt blaster", maintain a minimum distance of 50 cm (20 inches).

▷ Never use high-pressure cleaning units with a round-jet nozzle.
A high-pressure cleaning unit with round nozzle will damage your vehicle. The tyres are particularly susceptible to damage.

▷ Do not point the cleaning jet directly at any of the aforementioned components.

Care of door lock

▷ To prevent the door lock from freezing during the cold season, cover the lock barrel with a suitable adhesive tape during washing.

If the lock freezes nevertheless, use an ordinary de-icer.
In many cases, a well warmed key can help.
Never use excessive force.

Washing

The best protection for the vehicle from the damaging effects of the environment is frequent washing and preservation.

The longer road salt, road dust, industrial dust, insect remains, bird excrement, and tree exudations (e.g. resin, pollen), etc. are allowed to remain on the bodywork, the more serious is their harmful effect.

Pay attention to the following points in order to ensure that the vehicle is washed thoroughly without damaging the paintwork:

▷ The underside of the vehicle should also be thoroughly washed at the end of the gritting season at the latest.

▷ Wash your vehicle only at sites provided for this purpose to prevent soot, grease, oil and heavy metals from entering the environment.

▷ Dark colours are slightly more susceptible to scratching and require particularly careful paint care.
Dark paints make even the smallest surface blemishes (scratches) more conspicuous than lighter colours.

▷ Do not wash your Porsche in direct sunlight or when its body is hot.

▷ When washing by hand, use a car shampoo, plenty of water, and a soft sponge or washing brush.
We recommend Porsche car shampoo.

▷ Begin washing the vehicle by thoroughly wetting the paintwork and rinsing the heavy dirt off.

▷ After washing the vehicle, rinse it thoroughly with water and leather it dry.
Do not use the same leather to rub down as you use for cleaning the windscreen and windows.

⚠ Warning!

Risk of accident! Reduced or uneven braking action may be caused by wet brakes.

▷ After washing the vehicle, test the brakes and briefly brake the discs dry.
When doing so, make sure that following traffic is not affected.

Cleaning in car washes

Optional add-on parts or parts which project beyond the contours of the vehicle may be damaged by design features of car washes.

The following parts are particularly susceptible to damage:

– Windscreen wipers and rear wiper (always switch them off – wiper switch in position **0** – to prevent them wiping unintentionally in intermittent or sensor operation)

– Door mirrors (always fold in)

– Roof Transport System (always remove completely)

– Spoiler

– Wheels (the wider the rim and the lower the tyre height, the greater the risk of damage)

▷ Please consult the operator before using automatic car washes.

▷ Wash and leather by hand all points not reached by a car wash, such as door and lid seams or door sills.

Paint care

In order to protect the paint of your vehicle in the best possible way against mechanical and chemical damage, you should

– preserve it regularly,

– polish it if necessary,

– remove spots and stains, and

– repair paint damage as soon as possible.

General information

▷ Never rub a dusty vehicle with a dry cloth, because the grains of dirt will damage the paintwork.

▷ Do not treat matt-painted components with preservatives or polishes, otherwise the matt effect will be lost.

Preservation

The paint surface becomes dull over time due to weathering.

▷ Preserve paint regularly.

▷ Apply paint preservative after washing the vehicle and polish it smooth to preserve the paintwork.

This keeps the paint shiny and elastic. Dirt is prevented from adhering to the paint surface and industrial dust is prevented from penetrating the paint.

Polishing

Only when the original polish can no longer be obtained using preservatives should paint polish be used to clean the paint.
We recommend Porsche paint polish.

Removing spots and stains

▷ Remove tar spatters, traces of oil, insects etc. as soon as possible with an insect remover, as they discolour the paint if left to work on it over time.

▷ Carefully wash the treated areas again.

Repairing minor paint damage

▷ Have minor paint damage (cracks, scratches or stone damage) repaired immediately **before** corrosion begins.
Consult a qualified specialist workshop. We recommend that you use a Porsche partner for this work since these are staffed with trained personnel and have the necessary parts and tools.

If traces of corrosion have already formed, these must be thoroughly removed. An anti-corrosion primer is then applied at these locations, followed by top coat paint.
Paint data can be found on the vehicle data bank.

▷ For information on the location of vehicle data bank:
Please observe the chapter “DATA BANK” on Page 361.

Cleaning the engine compartment

Caution!

Risk of damage, e.g. to the generator, painted surfaces, and the valve covers.

▷ Never use high-pressure cleaners with a round-jet nozzle.

▷ Always observe a minimum distance of 50 cm (20 inches).

▷ Always cover the lid of the brake fluid reservoir prior to cleaning with a high-pressure cleaner. Never point the cleaning jet directly at the lid.

▷ Do not point the cleaning jet directly at any of the aforementioned components.

Note on operation

If the vehicle is driven off-road frequently and after driving on salted or gritted roads:

▷ Clean the engine compartment regularly.

Cleaning windows

▷ Clean all windows regularly, inside and out, with window cleaner.
We recommend the Porsche window cleaner.

▷ Make sure not to damage the TV antennas in the side windows when cleaning.

▷ Do not use the same leather for painted surfaces and for drying the windows. Preservative residues could reduce transparency.

▷ Remove insect residues with insect remover.

Note

The front side windows feature a water-repellent (hydrophobic) coating which prevents soiling of the windows.
This coating is subject to natural wear and can be renewed.

▷ Consult a qualified specialist workshop. We recommend that you use a Porsche partner for this work since these are staffed with trained personnel and have the necessary parts and tools.

Care of windscreen wiper blades

Wiper blades that are in perfect condition are vital for a clear view.

▷ Replace the wiper blades twice per year (before and after the cold season) or if wiper performance deteriorates or the blades are damaged.

▷ For information on changing wiper blades: Please observe the chapter “WIPER BLADES” on Page 276.

▷ Periodically clean the wiper blades with window cleaner, especially after the vehicle has been washed in a car wash.
We recommend the Porsche window cleaner.
In the event of heavy soiling (e.g. insect residue), the blades can be cleaned with a sponge or a cloth.

If the wiper blades rub or squeak, this may have the following causes:

– If the vehicle is washed in an automatic car wash, wax residues may adhere to the windscreen. These wax residues can be removed only by using window cleaner concentrate.

▷ Please observe the chapter “ADDING WASHER FLUID” on Page 274.

Please contact your Porsche partner for further information.

– The wiper blades may be damaged or worn.

▷ Replace damaged wiper blades as soon as possible.

Repairing the underbody protection

The underside of the vehicle is lastingly protected against chemical and mechanical effects.
Damage to the protective coating while driving cannot be ruled out.

▷ For this reason, have the vehicle underside checked and repaired at regular intervals by a qualified specialist workshop.

⚠ Warning!

Risk of fire in the area of the exhaust system.

▷ Do not apply additional undersealing or rust protection agent on or near the exhaust manifolds, exhaust pipes, catalytic converters or heat shields.
The protective material could overheat and ignite while you are driving.

Cleaning headlights, lights, interior and exterior plastic parts, adhesive films

Observe the following points:

- ▷ Use **only** clean water and a little dishwashing detergent or interior window cleaner to clean headlights, lights, plastic parts and surfaces. Use a soft sponge or a soft, lint-free cloth.

Note

An interior window cleaner can also be used to clean plastic surfaces (observe cleaning instructions on the container!).
We recommend the Porsche interior window cleaner.

- ▷ Gently wipe the surface without applying too much pressure.
- ▷ Do not clean when dry.
- ▷ Never use other chemical cleaners or solvents.
- ▷ Rinse cleaned surfaces with clear water.

Light alloy wheels

Metal particles (such as brass or copper in brake dust) must not remain too long on a light alloy wheel.
Contact corrosion can cause pitting.

Note

Cleaners with an oxide-removing effect or wrong pH value, as are commonly used for other metals, as well as mechanical tools and products, will damage the oxide layer and are therefore unsuitable.

- ▷ **Use only cleaners for light alloy wheels (pH value 9.5). Products with the wrong pH value can destroy the protective layer on the wheels.**
  We recommend Porsche cleaner for light alloy rims.
- ▷ If possible, wash the wheels every two weeks with a sponge or washing brush. Where there is road salt, grit or industrial dust, weekly cleaning is necessary.
- ▷ Every three months, after cleaning, grease the wheels with car wax or an acid-free grease (e.g. Vaseline).
  Rub the grease in well with a soft cloth.
- ▷ For information on cleaning the light alloy wheels in car washes:
  Please observe the chapter “CLEANING IN CAR WASHES” on Page 283.

⚠ Warning!

Danger of accident if cleaning agents (e.g. wheel cleaning agents) come into contact with the brake discs. The resulting film on the brake discs can impair braking performance.

- ▷ Make sure that no cleaning agent comes into contact with the brake discs.
- ▷ If cleaning agent has come into contact with the brake discs, thoroughly clean the brake discs with a strong jet of water.
- ▷ Paying attention to any road users behind you, dry the brake discs by applying the brakes.

Stainless steel exhaust tailpipes

Stainless steel exhaust tailpipes can discolour due to soiling, strong heat, and combustion residues.

The original polish can be achieved again using commercially available metal polishing paste or metal polish.

Cleaning door, roof, lid and window seals

Caution!

The lubricant coating on the inner door seals may be damaged by unsuitable cleaning and care agents.

- ▷ Do not use any chemical cleaning agents or solvents.
- ▷ Do not use any care agents.

- ▷ Wash dirt (e.g. abrasion, dust, road salts) from all seals regularly using warm soapy water.
- ▷ When there is a frost hazard, protect the outer door seals and the lid seals against freezing into place with a suitable care product.

Leather care

The natural surface markings of leather, e.g. creases, healed scars, insect sting marks, structural differences and slight variations in shade and grain add to the attractiveness of the high-quality natural leather product.

Observe the following care instructions:

Caution!

The leather will be damaged by the use of unsuitable cleaning and care agents and by inappropriate treatment.

- ▷ Do not use caustic cleaners or hard cleaning objects!
- ▷ Perforated leather must under no circumstances get wet on its reverse side.

- ▷ All types of leather should be cleaned regularly to remove fine dust using a soft, damp, white woollen cloth or a commercially available microfibre cloth.
- ▷ Remove heavy contamination with a leather cleaner.
  Please always follow the instructions for use given on the containers.
  We recommend the Porsche leather care product.
- ▷ Treat cleaned leather only with a leather care liquid.
  We recommend the Porsche leather care product.

Cleaning carpet, floor mats

- ▷ Use a vacuum cleaner or a brush (not too soft) for cleaning.
- ▷ Remove heavy dirt and stains with a stain remover.
  We recommend Porsche stain remover.

To protect carpets, the Porsche range of accessories includes mats of the correct size with the appropriate fastenings.

Warning!

Risk of accident.

- ▷ Do not obstruct the pedal travel with floor mats.
  Secure floor mats properly – do not place them loosely on the floor.

Cleaning airbag covers

Danger!

There is a danger of severe or fatal injuries if operation of the airbag system is impaired by improper cleaning work.

- ▷ Do not make any modifications whatsoever on individual components such as the padded covers of the steering wheel, the front seats, the roof pillars and the roofliners.
- ▷ Let your Porsche partner clean these components.

Cleaning fabric linings

- ▷ Fabric linings on pillars, roofliner and sun blinds etc. must be treated only using suitable cleaning agents or a suitable dry foam and a soft brush.

Alcantara care

Do not use a leather care product to clean Alcantara.

For regular care it is sufficient to clean the cover with a soft brush.

Heavy abrasion or rubbing when cleaning causes a lasting change in the surface.

Cleaning when lightly soiled

- ▷ Wet a soft cloth with water or a neutral soap solution and wipe off the dirt.

Cleaning when heavily soiled

- ▷ Wet a soft cloth with lukewarm water or thinned white spirit and dab the dirt from the outside in.

Cleaning the seat belts

- ▷ Use mild detergent to clean soiled belts.
- ▷ When drying, avoid direct sunlight.
- ▷ Only use suitable cleaning agents.
- ▷ Do not dye or bleach the belts.
  The belt fabric could be weakened, thus affecting safety.

Laying up your Porsche

If you wish to keep your Porsche off the road for a lengthy period, we recommend that you contact your Porsche partner.
They will be glad to advise you about the necessary measures, e.g. corrosion prevention, care, maintenance and storage.

Further important information on “Laying up your Porsche” can be found in other chapters.

- ▷ Please observe the chapter “BATTERY” on Page 332.
- ▷ To lock the vehicle when the battery is disconnected:
- ▷ Please observe the chapter “NOT ALL VEHICLE DOORS ARE LOCKED” on Page 28.

Minor repairs

Notes on minor repairs....290
Tyres and wheels....292
Jack....298
Tool kit....298
Compressor....299
Spacers....299
Wheel bolts....300
Flat tyre....301
Inflating tyres on vehicles without level control....313
Inflating tyres on vehicles with level control...315
Electrical system....321
Battery....332
Replacing the remote control battery....335
External power supply, jump lead starting....336
Replacing bulbs....339
Headlights....339
Tail light....349
Number plate lights....352
Headlight adjustment....353
Changing headlights from left to right-hand traffic....353
Bulb chart....355
Towing and tow-starting....356

Notes on minor repairs

We recommend that you use your Porsche partner for carrying out this work.
Experienced, Porsche trained workshop personnel, supplied with the latest information as well as special tools and equipment are prerequisites for looking after your Porsche properly.

If, however, you work on your vehicle yourself, you must do it with great care. Only in this way is operational reliability fully guaranteed.

Unskilled maintenance work performed during the guarantee period may cause you to lose your claims.

Warning triangles

The storage location for the warning triangles is under the left rear-seat cushion.

Warning!

Danger of injury and/or damage as a result of braking or in the event of an accident.

▷ Do not place any objects between the seat cushion and foam part.

Tool kit

The tool kit is accommodated in the spare-wheel well under the cover of the loadspace floor.

First aid kit

The first aid kit is stored in the storage compartment on the right side of the luggage compartment.

▷ For information on opening the storage compartment:
Please observe the chapter “SIDE STORAGE COMPARTMENTS IN THE LUGGAGE COMPARTMENT” on Page 237.

Danger!

Risk of death, injury and fire during maintenance work.

▷ Do not smoke in the vicinity of the battery or fuel system, and do not use a naked flame.

▷ Only work on the vehicle in the open or in well-ventilated spaces.

▷ Take care when working near hot engine parts.

▷ Before working in the engine compartment, always switch the engine off and let it cool sufficiently.

▷ If you have to work on the engine while it is running, always apply the parking brake **and** put the gearshift lever in neutral or the Tiptronic selector lever in position **P**.

▷ Take great care to ensure that hands, fingers, articles of clothing (ties, sleeves, etc.), necklaces or long hair cannot be caught up by the radiator fans, drive belt or other moving parts.

▷ Exercise extreme caution when working in the area of the radiator fans.
The radiators and radiator fans are in the front of the vehicle.
The fans can start running as a function of temperature, even with the engine switched off.

▷ When the ignition is on, all cables and wires of the ignition system carry a high voltage. Special care is therefore required.

▷ Always place the vehicle on stable supports if work has to be carried out under the vehicle. The car jack is not suitable for this.

For information on raising vehicles with air suspension with level control and height adjustment:
Please observe the chapter “RAISING VEHICLE WITH THE JACK” on Page 205.

▷ Refill fluids, e.g. engine oil, brake fluid or coolant, are hazardous to health.
Store refill fluids out of reach of children and, if necessary, dispose of these fluids properly.

Tyres and wheels

In addition to correct tyre filling pressure and correct wheel alignment, the service life of the tyres also depends on your driving style.
Abrupt acceleration, high cornering speeds and heavy braking increase tyre wear. The tread wear is also greater at higher outside temperatures and on rough road surfaces.
Just like the engine, tyres always require the correct operating conditions. When correctly treated, they are a long-lived safety component on your Porsche.
For your own protection and that of other road users, you must observe the following instructions.

We recommend inspecting the tyres for damage after off-road driving.

Load and speed

▷ Do not overload your vehicle. Be careful about the roof load. There is a danger from overloading
+ insufficient tyre pressure
+ high speed
+ high outside temperature
(e.g. holiday driving).

Tyre pressure

The tyre pressure must match the prescribed value.

You can find information on the tyre pressure:

– In the front left door aperture.

– In the Technical Data chapter in this Driver's Manual:
Please observe the chapter "TYRE PRESSURES, COLD" on Page 367.

These values are for cold tyres (20 °C).

▷ Check the tyre pressure at least every 2 weeks. Always check when tyres are cold.

▷ On vehicles with Tyre Pressure Monitoring:
Please observe the chapter "SETTING TYRE PRESSURE MONITORING" on Page 135.

When tyres are warm, the tyre pressure is increased.

▷ Never let air out of hot tyres. This could cause the tyre pressure to fall below the prescribed value.

Valve caps protect the valve from dust and dirt, and thus from leakage.

▷ Always screw caps down tightly.

▷ Replace missing caps immediately.

Insufficient tyre pressure can cause tyres to overheat and thus be damaged – even invisibly. Hidden tyre damage is not eliminated by subsequently correcting the tyre pressure.

Tyre damage

Cleaning with high-pressure cleaners can damage the tyres.

▷ For further information on cleaning with high-pressure cleaners:
Please observe the chapter "HIGH-PRESSURE CLEANING UNITS" on Page 282.

⚠ Warning!

Risk of accident due to hidden tyre damage. Tyres may burst, especially at high speeds.

▷ Check tyres including the sidewalls regularly for foreign bodies, nicks, cuts, cracks and bulges.

▷ Cross kerb edges slowly and at right angles if possible.
Avoid driving over steep or sharp kerbs.

▷ In cases of doubt, have the wheel (particularly the inner side) checked by an expert.

In the case of the following tyre damage, the tyre must be replaced for safety reasons:

– Tyre damage where the possibility of a ply fracture cannot be ruled out.
– If the tyre has been thermally and mechanically overloaded following a loss of pressure or other previous damage.

Maintenance note

Tyre repairs are not permissible under any circumstances.

▷ After driving off-road, examine tyres for signs of damage such as cuts, tears, bulges or foreign objects stuck in the tread and replace if necessary.

Kerbs

Heavy or sharp-angled impacts against kerbs or sharp-edged objects (e.g. stones) can cause hidden tyre damage that only shows up later. Depending on the strength of the impact, the rim flange may also be damaged.

Storing wheels

▷ Always store wheels in cool, dry, dark conditions. Tyres without wheels should be stored in a standing position.

▷ Avoid contact with petrol, oil and grease.

In no case should tyres be more than 6 years old.

The idea that tyres become more wear-resistant with storage and age has no foundation. Chemical additives that make the rubber elastic lose their effect in the course of time and the rubber becomes brittle. The age of a tyre can be seen from the DOT code on the tyre sidewall. If, for example, the last four digits are 1206, this means: the tyre was manufactured in the twelfth week of 2006.

Tread

The less tread, the greater the danger of aquaplaning.

▷ For safety reasons, replace the tyres **before** the wear indicators appear (webs in the tyre grooves, 1.6 mm high).

▷ Check tyre tread regularly, particularly before and after long journeys.

Wheel balancing

▷ As a precaution, have wheels with summer tyres balanced in the spring, and those with mud and snow tyres before winter.

Only specified weights may be used for wheel balancing.
Self-adhesive weights must not come into contact with cleaning agents, since they could drop off.

Wheel change

▷ When wheels are removed, mark the direction of rotation and position of each wheel.
Example:
FR (front right), FL, RR and RL.

▷ Always fit the wheels in accordance with their marking.

Wheel alignment

Uneven tread wear indicates incorrect wheel alignment. In this case, the vehicle should be checked.

▷ Consult a qualified specialist workshop. We recommend that you use a Porsche partner for this work since these are staffed with trained personnel and have the necessary parts and tools.

⚠ Warning!

Risk of accident. You can lose control of the vehicle.
If, during a journey, uneven running or vibrations occur that could be caused by damage to tyres or the car:

▷ Reduce speed immediately, but without braking sharply.

▷ Stop the vehicle and check the tyres.
If no cause for the fault can be found, drive carefully to the nearest qualified specialist workshop.
We recommend that you use a Porsche partner for this work since these are staffed with trained personnel and have the necessary parts and tools.

Replacing tyres

▷ Before having new tyres fitted, find out about the current approval status.

▷ Use only tyre makes tested and approved by Porsche.

Basically, only tyres of the same make, same type and with the same specification number (e.g. “N0”, “N1” ...) may be fitted.

In the initial period, new tyres do not have their full grip.

▷ Therefore, do not drive above moderate speeds during the first 100 to 200 km (60 to 120 miles).

If new tyres are fitted to only **one** axle, the different tread depths on the two axles can cause a marked change from the previous driving behaviour to which you have become accustomed. This is particularly true when new tyres are fitted to the rear axle.

The effect is reduced continuously, however, as tyre mileage increases.

▷ Adapt your driving style to the changed handling.

Tyres should only be fitted by specialist firms.

When a defective tyre is replaced, it should be noted that deviations in tread depth must not exceed 30 % on one axle.

▷ Do not use second-hand tyres if you do not know their history.

Valves

▷ Use only plastic valve caps.

Rubber valves must be replaced whenever the tyres are changed.
In the case of metal valves, please observe the fitting and replacement instructions.
Use only genuine Porsche metal valves or valves of the same quality, which are manufactured according to the specifications and production demands of Porsche.

▷ Protect valve inserts against soiling with valve caps.
Soiled valve inserts can cause a gradual loss of air.

Sticker for maximum speed

Winter tyres

Warning!

Risk of accident due to excessive speed.

- ▷ Always observe the permissible maximum speed of the respective tyre.
- ▷ A sticker showing the maximum permissible speed must be affixed in the driver's field of vision.
  Observe the country-specific laws.

- ▷ Fit winter tyres to both axles in good time before the cold season begins.
  Your Porsche partner will be pleased to advise you.

Maintenance note

We recommend fitting winter tyres on the vehicle at temperatures below 7 °C since the driving performance of summer tyres is reduced at low temperatures. Summer tyres may be permanently damaged at extremely low temperatures.

Winter tyres lose their suitability when their tread depth falls below 4 mm.

- ▷ Please note that in addition to winter tyres, all-season and all-terrain tyres also belong to the category M+S tyres.

Wheel change

- ▷ When wheels are removed, mark the direction of rotation and position of each wheel.
  Example: FR (front right), FL, RR and RL.
- ▷ Always fit the wheels in accordance with their marking.

Snow chains

Optimal handling characteristics can be achieved only when snow chains are fitted on all four wheels of the vehicle. It is also possible to fit snow chains on only one axle (preferably the rear axle).

- ▷ Remove spacers if 18 inch tyres, snow chains or a collapsible spare wheel are mounted.

Caution!

Risk of damage to the wheel housings if the spacers on the rear axle are not removed before fitting snow chains.

- ▷ The 17 mm spacers must always be removed from the rear axle when snow chains are to be fitted.

- ▷ For information on the spacers:
  Please observe the chapter "SPACERS" on Page 299.
  For information on removing the spacers:
  Please observe the chapter "CHANGING A WHEEL WITH REMOVAL OF 17 MM SPACERS" on Page 309.
- ▷ Use only the fine-link snow chains recommended and authorised by Porsche so that sufficient clearance between the wheel well and the chain is assured.

- For information on approved snow chains: Please observe the chapter “TYRES, RIMS, TRACKS” on Page 365.
- Before fitting chains, remove accumulated ice and snow from the wheel well.
- Observe the maximum permissible speed when using snow chains of **50 km/h (30 mph)**.

A - *Nominal width in mm*
B - *Cross-section ratio in %*
C - *Belt type code letter for radial*
D - *Rim diameter in inches*
E - *Load rating code number*
F - *Speed code letter*

Inscription on radial tyre

Speed code letters

The speed code letter **F** indicates the maximum permissible speed for the tyre.
This code letter is shown on the tyre sidewall.

T = up to 190 km/h (118 mph)
H = up to 210 km/h (131 mph)
V = up to 240 km/h (149 mph)
W = up to 270 km/h (167 mph)
Y = up to 300 km/h (186 mph)

Tip on driving

▷ Tyres with a maximum speed rating that is lower than the specified maximum vehicle speed may be mounted only if they bear an M+S identification on the tyre sidewall.
Please note that in addition to winter tyres, all-season and all-terrain tyres are also subject to speed limits and bear this identification.

Inscription on light alloy wheels

The rim width in inches **G** and the rim offset **L** are visible from the outside. This information can be found near the tyre valve.

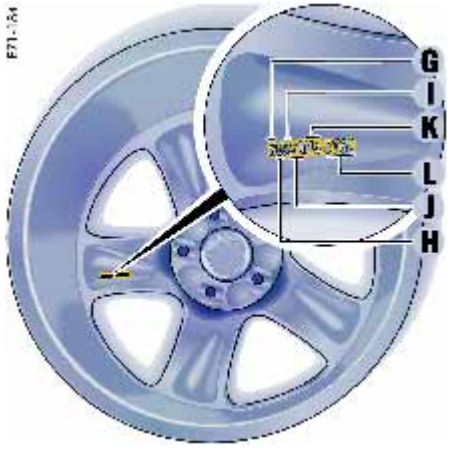

G - *Rim width in inches*
H - *Rim-flange contour code letter*
I - *Symbol for drop-centre rim*
J - *Rim diameter in inches*
K - *Double hump*
L - *Rim offset in mm*

A - *Tool kit*

Jack

The jack is accommodated with the tool kit **A** under the loadspace floor.

Warning!

Risk of injury. The vehicle may slip off the jack.

- ▷ Only use the jack to raise the car for wheel changing.
- ▷ Always place the vehicle on stable supports if work has to be carried out under the vehicle. The car jack is not suitable for this.

Lifting the vehicle with a lifting platform or trolley jack

- ▷ For information on wheel changing: Please observe the chapter “CHANGING A WHEEL” on Page 308.
- ▷ Lift only at the jacking points provided.
- ▷ Before driving the vehicle onto a lifting platform, ensure that there is sufficient space between the lifting platform and the vehicle.
- ▷ In order to avoid serious damage, never jack up the vehicle at the engine, transmission or at the axles.

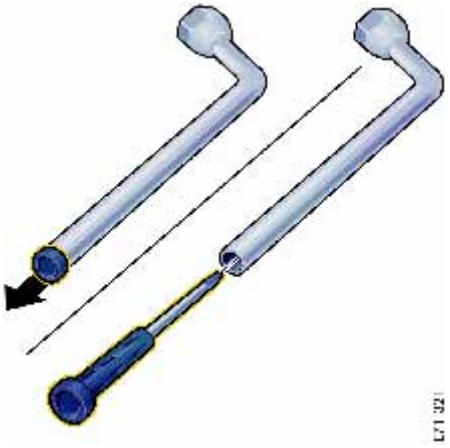

Tool kit

The tool kit and, where appropriate, the compressor with pressure tester are accommodated under the loadspace floor.

Note on operation

The screwdriver is located in the handle of the wheel bolt wrench.

A *- Compressor*

Compressor

On vehicles **without** level-control system, there is an additional compressor **A** with pressure tester under the loadspace floor.

▷ For information on filling the tyres using the compressor under the loadspace floor: Please observe the chapter “INFLATING TYRES ON VEHICLES WITHOUT LEVEL CONTROL” on Page 313.

On vehicles **with** level control, you can use the compressor of the level-control system to fill the tyres.
The filler hose required for this purpose can be found under the loadspace floor in the spare-wheel well.

▷ For information on filling the tyres with the compressor of the level-control system: Please observe the chapter “INFLATING TYRES ON VEHICLES WITH LEVEL CONTROL” on Page 315.

Spacers

▷ Use the spacers only together with wheels approved by Porsche.
Before having spacers fitted, find out about the current approval status.

▷ Remove spacers if 18 inch tyres, snow chains or a collapsible spare wheel are mounted.

⚠ Danger!

Risk of accident if spacers are not removed before mounting 18 inch tyres or a collapsible spare wheel.

▷ Always remove the 17 mm spacers before mounting 18 inch tyres or a collapsible spare wheel because the wheel cannot be fitted correctly.

⚠ Caution!

Risk of damage to the wheel housings if the spacers on the rear axle are not removed before fitting snow chains.

▷ The 17 mm spacers must always be removed from the rear axle when snow chains are to be fitted.

Note on operation

- ▷ For information on removing the spacers: Please observe the chapter “CHANGING A WHEEL WITH REMOVAL OF 17 MM SPACERS” on Page 309.
- ▷ For information on fitting the spacers: Please observe the chapter “FITTING THE 17 MM SPACERS” on Page 310.

Wheel bolts

- ▷ Always clean the wheel bolts before fitting.

Maintenance notes

- ▷ Wheel bolts must not be greased.
- ▷ Replace damaged wheel bolts.
  Only use genuine Porsche wheel bolts assigned especially to this model or wheel bolts of similar quality which have been manufactured according to Porsche specifications and production requirements.

Tightening torque

Tightening torque of the wheel bolts: **160 Nm (118 ftlb.)**.

Security wheel bolts

The adapter (wrench socket) for the security wheel bolts is in the tool kit.

The adapter must be used between the wheel bolt and the wheel bolt wrench to loosen or tighten wheel bolts with anti-theft protection.

- ▷ When positioning the wrench socket, ensure that it engages fully in the teeth of the wheel bolt.

Notes on operation

On vehicles with 17 mm spacers on the rear axle, the wheels are secured with steel nuts. There is no anti-theft protection for the wheel nuts.

If the wheels have to be removed at the workshop, please do not forget to hand over the socket for the security wheel bolts along with the vehicle key.

Flat tyre

1. Stop the vehicle as far away from the driving lane as possible.
   The vehicle must be parked on a firm and flat surface offering adequate grip.
2. Switch on the hazard warning lights.
3. Fully apply the parking brake.
4. Shift into 1st gear or move the Tiptronic selector lever to position **P**.
5. Straighten the front wheels.
6. Withdraw the ignition key to lock the steering and prevent the engine from being started.
7. Have all passengers leave the vehicle.
8. Set up a warning triangle at a suitable distance.

A *- Wedges*

Securing the vehicle against rolling

For this purpose, use the two folding wedges **A** secured next to the tool kit.

1. You can remove the wedges after undoing the Velcro fastening.

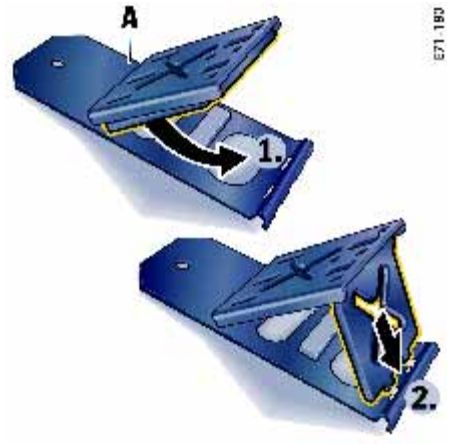

A *- Folding wedges*

2. Unfold the wedges.
3. Lock them in unfolded position.

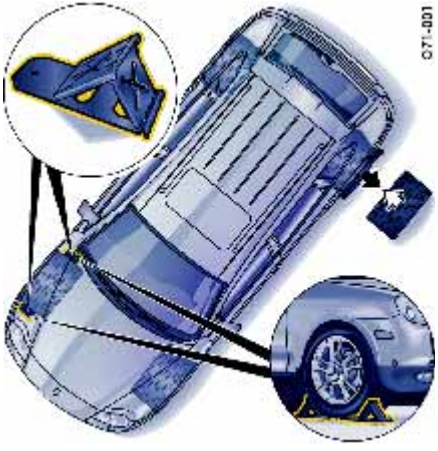

4. Place one wedge each directly in front of and behind the diagonally opposite wheel.

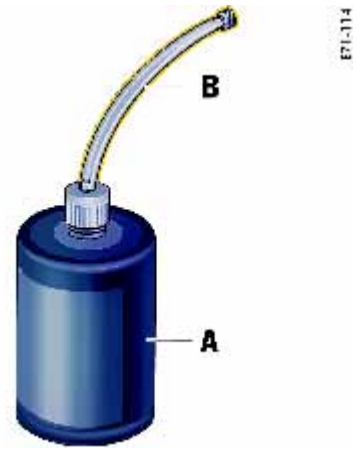

A - *Filler bottle*
B - *Filler hose*

Tyre sealant

The tyre sealant is located in the luggage compartment under the loadspace floor.

The tyre sealant can be used to seal small cuts, especially in the tyre tread.

Sealing the tyre with the tyre sealant is only an emergency repair, so you can drive to the next workshop. Even if the tyre is air-tight, it may only be used for short journeys in an emergency.

The tyre sealant and a compressor with pressure tester (on vehicles **without** level-control system) can be found under the loadspace floor in the luggage compartment.

The tyre sealant comprises:

- a filler bottle,
- a filler hose,
- a valve turner,
- a spare valve insert,
- a sticker with the maximum permissible speed and
- a set of instructions.

Danger!

Risk of accident.

▷ Use the tyre sealant only in the case of cuts or punctures no larger than 4 mm.

▷ Never use the tyre sealant if the rim is damaged.

Warning!

The sealant is highly flammable and harmful to health.

▷ Fire, naked flame and smoking are prohibited when handling tyre sealant.

▷ Avoid contact with skin, eyes or clothing.

▷ Keep tyre sealant away from children.

▷ Do not inhale vapours.

In case of contact with the sealant:

▷ If sealant gets on the skin or in the eyes, thoroughly rinse the affected part of the body off or out without delay.

▷ Change soiled clothing immediately.

▷ Visit a doctor immediately in the event of an allergic reaction.

▷ If sealant was swallowed, thoroughly rinse out the mouth without delay and drink plenty of water. Do not induce vomiting.
See a doctor immediately.

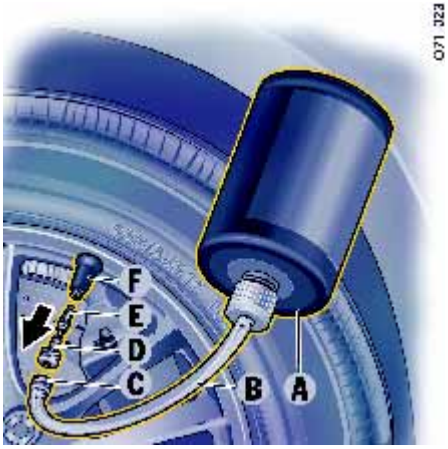

A - *Filler bottle*
B - *Filler hose*
C - *Plug of the filler hose*
D - *Valve turner*
E - *Valve insert*
F - *Tyre valve*

Filling in sealant

1. Leave the object that caused the puncture in the tyre.
2. Remove sealant and the enclosed sticker from the luggage compartment.
3. Adhere the sticker in the driver's field of vision.
4. Shake filler bottle **A**.
5. Screw filler hose **B** onto the filler bottle.
   The filler bottle is now open.
6. Unscrew valve cap from tyre valve **F**.
7. Remove valve insert **E** from the tyre valve with valve turner **D**.
   Keep the valve insert in a clean and dry place.
8. Remove plug **C** of filler hose **B**.
9. Push filler hose onto the tyre valve.
10. Hold filler bottle higher than the level of the tyre valve and squeeze it forcefully until the bottle is completely emptied into the tyre.
11. Pull filler hose off the tyre valve.
12. Twist the valve insert firmly into the tyre valve using the valve turner.
13. Inflate tyre.
    Set the prescribed tyre pressure.
    Information on the tyre pressure is provided in the chapter Technical Data in this Driver's Manual:
    Please observe the chapter "TYRE PRESSURES, COLD" on Page 367.
14. Screw valve cap onto the tyre valve.
15. Check the tyre pressure after driving for around 10 minutes.
    If the tyre pressure is less than 1.5 bar (22 psi), do not continue driving.
    If a value of more than 1.5 bar (22 psi) is indicated, correct the pressure to the prescribed value.
16. Consult a qualified specialist workshop. We recommend that you use a Porsche partner for this work since these are staffed with trained personnel and have the necessary parts and tools.

Note on operation for vehicles with Tyre Pressure Monitoring

The settings for Tyre Pressure Monitoring must be updated on the multi-purpose display after filling the tyre with sealant. To do this: Please observe the chapter "SETTING TYRE PRESSURE MONITORING" on Page 135.

Care instructions

After drying, any sealant that emerges can be peeled off like a film.

Warning!

Risk of accident.

- ▷ Have tyre replaced by a specialist workshop as soon as possible.
- ▷ Avoid hard acceleration and high cornering speeds.
- ▷ Observe maximum speed of 80 km/h (50 mph)
- ▷ Please always observe the safety and operating instructions, which can be found in the separate operating instructions for the sealant and on the compressor.

Raising vehicle with the jack

Warning!

Risk of injury. The vehicle may slip off the jack.

- ▷ Make sure that no one is in the vehicle when jacking up and changing a wheel.
- ▷ Never jack up the vehicle when it is parked on a surface which slopes up, down or to the side.
- ▷ Only use the jack to raise the car for wheel changing.
- ▷ Always place the vehicle on stable supports if work has to be carried out under the vehicle. The car jack is not suitable for this.

Danger of injury if the level-control system operates during the wheel change.

- ▷ Set the vehicle to jacking mode before starting to change the wheel.
- ▷ For information on setting jacking mode: Please observe the chapter “RAISING VEHICLE WITH THE JACK” on Page 205.

Risk of injury and damage if the vehicle is not secured.

- ▷ Secure the vehicle against rolling To do this: Please observe the chapter “SECURING THE VEHICLE AGAINST ROLLING” on Page 301.

Maintenance note

The jacking point for the jack on the vehicle must be free of dirt.

1. Slightly slacken the wheel bolts of the wheel to be changed.
2. Only attach the jack at the jacking points provided. The jack foot must be in contact over its whole area and must be positioned directly below the head piece.
   Use a suitable support surface if necessary.
3. Hold jack tight and wind it up until its head is in contact with the jacking point on the vehicle. Only jack vehicle up until only the wheel to be changed is completely off the ground.
4. After lowering the vehicle, remove the jack.

Front jacking point

Access to the jacking points differs according to the respective vehicle equipment.

Jacking points

▷ Attach jack only at the points provided **A** or **C**.

Rear jacking point

The rear jacking point is accessible after removing the covering cap **B** from the sill cover.

Removing covering cap:

▷ Pull out covering cap **B** at the bottom at the rear.

Inserting covering cap:

▷ Insert the covering cap **B** in the bottom guides and push in completely until you feel the upper lugs snap into place.

Vehicles with running board
Front jacking point

Jacking points on vehicles with a running board

▷ Attach jack only at the points provided **D** or **E**.

Vehicles with running board
Rear jacking point

Vehicles with sill cover
Front jacking point

Vehicles with sill cover
Rear jacking point

Jacking points on vehicles with sill covers

The jacking points are accessible after removing the plastic covering caps **F** or **H** from the sill covers.

Removing covering cap:

1. Open covering cap **F** or **H** in the sill cover to the front by means of the internal handle recess and pull off (**arrow**).
2. Attach jack only at the points provided **G** or **I**.

Fitting covering cap:

▷ Insert the covering cap **F** or **H** completely in the slots of the sill cover with both centring lugs and fold back until it can be felt to engage.

Changing a wheel

1. Remove the top wheel bolt.
2. Remove assembly aid from the tool kit and screw in instead of the wheel bolt.
3. Remove the remaining wheel bolts.
   For further information on wheel bolts:
   Please observe the chapter “WHEEL BOLTS” on Page 300.
4. Change wheel.
5. Insert wheel bolts and tighten by hand.
   Remove assembly aid, screw in remaining wheel bolt.
   Initially tighten bolts only slightly in diagonally opposite sequence so that the wheel is centred.
6. Fill the tyre with air if necessary.
   Information on the tyre pressure is provided in the chapter Technical Data in this Driver’s Manual: Please observe the chapter “TYRE PRESSURES, COLD” on Page 367.
7. Lower vehicle and remove jack.
8. Tighten wheel bolts in diagonally opposite sequence.

Note on operation for vehicles with Tyre Pressure Monitoring

On vehicles with Tyre Pressure Monitoring, the settings on the multi-purpose display must be updated after the wheel change:
Please observe the chapter “SETTING TYRE PRESSURE MONITORING” on Page 135.

Maintenance note

▷ **Immediately after changing a wheel, use a torque wrench to check the prescribed tightening torque of the wheel bolts (160 Nm/118 ftlb.).**

Changing a wheel with removal of 17 mm spacers

Danger!

Risk of accident if spacers are not removed before mounting 18 inch tyres or a collapsible spare wheel.

▷ Always remove the 17 mm spacers before mounting 18 inch tyres or a collapsible spare wheel because the wheel cannot be fitted correctly.

Caution!

Risk of damage to the wheel housings if the spacers on the rear axle are not removed before fitting snow chains.

▷ The 17 mm spacers must always be removed from the rear axle when snow chains are to be fitted.

▷ Remove spacers if 18 inch tyres, snow chains or a collapsible spare wheel are mounted.

▷ It is not necessary to use the assembly aid to fit an equivalent wheel or spare wheel.

▷ For information on the spacers: Please observe the chapter “SPACERS” on Page 299.

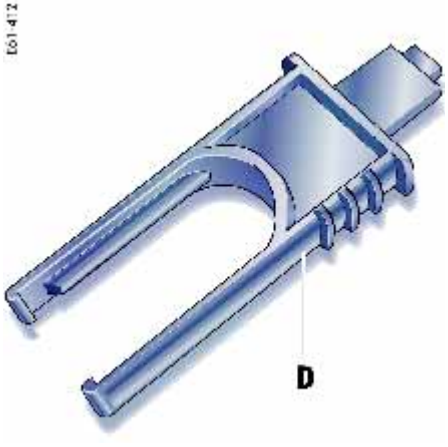

Puller

1. Remove plastic covers from the wheel nuts with the puller **D** from the tool kit.

2. Remove wheel nuts.

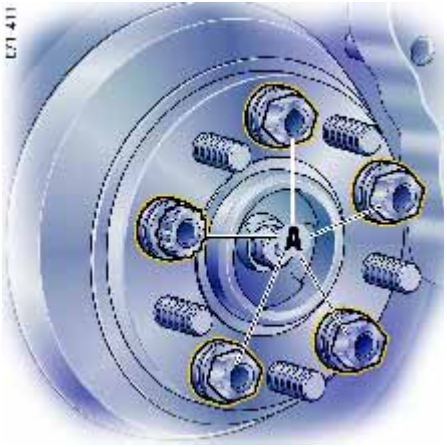

3. Unscrew the wheel bolts A **which serve to fasten the spacer.**
4. Remove the spacer.
5. Remove assembly aid from the tool kit and screw in instead of the wheel bolt.
6. Fit wheel.
7. Use the wheel bolts **A** with which the spacer was fastened to secure the wheel.
   Insert wheel bolts and tighten by hand.
   Remove assembly aid, screw in remaining wheel bolt.
   Initially tighten bolts only slightly in diagonally opposite sequence so that the wheel is centred.
8. Fill the tyre with air if necessary.
   Information on the tyre pressure is provided in the chapter Technical Data in this Driver's Manual: Please observe the chapter "TYRE PRESSURES, COLD" on Page 367.
9. Lower vehicle and remove jack.
10. Tighten wheel bolts in diagonally opposite sequence.

Note on operation for vehicles with Tyre Pressure Monitoring

On vehicles with Tyre Pressure Monitoring, the settings on the multi-purpose display must be updated after the wheel change:
Please observe the chapter "SETTING TYRE PRESSURE MONITORING" on Page 135.

Maintenance note

- ▷ **Immediately after changing a wheel, use a torque wrench to check the prescribed tightening torque of the wheel bolts (160 Nm/118 ftlb.).**
- ▷ Spacer, steel nuts and plastic covers should be stored together.

Fitting the 17 mm spacers

1. Remove wheel.
2. Fit the spacer with the wheel bolts **A** used to fasten the wheel.
   Tightening torque: **160 Nm (118 ftlb.)**
3. Fit wheel.
   To do this use the original wheel nuts for fastening the wheels.
   Tightening torque: **160 Nm (118 ftlb.)**
   Place plastic covers onto the steel nuts.

Note

There is no anti-theft protection for the wheel nuts.

Collapsible spare wheel

The collapsible spare wheel is located under the loadspace floor in the luggage compartment.

On vehicles with 17 mm spacers:

▷ Before fitting a collapsible spare wheel on the **rear axle** always remove the corresponding spacer.
For information on the spacers: Please observe the chapter “SPACERS” on Page 299.
For information on removing the spacers: Please observe the chapter “CHANGING A WHEEL WITH REMOVAL OF 17 MM SPACERS” on Page 309.

1. Remove rotary knob **A** and put it on screw **B.**
2. Undo the screw and take out the collapsible spare wheel.
3. Mount the collapsible spare wheel on the vehicle before inflating it. Leave the vehicle jacked up.
For information on wheel changing: Please observe the chapter “CHANGING A WHEEL” on Page 308.
4. Inflate tyre.
Information on the tyre pressure is provided in the chapter Technical Data in this Driver’s Manual:
Please observe the chapter “TYRE PRESSURES, COLD” on Page 367.

Warning!

Risk of accident.

▷ The collapsible spare wheel must be used only over short distances in cases of emergency. For safety reasons, replace the tyres **before** the wear indicators appear (webs in the tyre grooves, 1.6 mm high).

▷ Never deactivate the Porsche Stability Management (PSM) system.

▷ Avoid hard acceleration and high cornering speeds.
The maximum permitted speed is **80 km/h (50 mph)** and must not be exceeded because of altered driving characteristics and for reasons of wear.

▷ Do not use a collapsible spare wheel from a different vehicle type.

▷ Do not mount the collapsible spare wheel from your vehicle on a different vehicle.

▷ Only fit **one** collapsible spare wheel on the vehicle at any time.

▷ On vehicles with air suspension, use the tyre filling connection only to inflate the collapsible spare wheel.

After using the collapsible spare wheel

▷ Release air by unscrewing the valve insert.

Notes on operation

The tyre will revert to its original shape only after several hours. Only then can it be stowed in the spare wheel recess in the luggage compartment.

There is a plastic sheet in the tool kit for storing the damaged wheel.

Maintenance note

The collapsible spare wheel must be repaired only by the manufacturer.

▷ If there is a fault on the collapsible spare wheel:
Consult a qualified specialist workshop. We recommend that you use a Porsche partner for this work since these are staffed with trained personnel and have the necessary parts and tools.

Inflating tyres on vehicles without level control

The compressor with pressure tester is located in the luggage compartment under the loadspace floor.

▷ Please follow the operating instructions on the compressor.

1. Screw filler hose of the compressor onto the tyre valve.

2. Remove cover **A** of the engine compartment lining.

+ = Positive terminal for jump lead starting
– = Ground point for jump lead starting

3. Connect clips of the compressor to the jump lead starting terminals.
   Always observe the sequence below:

– Open the cap of the positive terminal for jump lead starting (**+**).

– Connect positive lead (red) to the positive terminal for jump lead starting (**+**).

– Connect negative lead (black) to the negative terminal for jump lead starting (**–**).

Caution!

Danger of burns. The compressor filler hose can become hot during the inflation process.

▷ Wear gloves.

4. Switch on compressor.
   The required filling pressure will be reached after a few minutes.
5. Switch off compressor.
6. Check filling pressure with pressure tester.
   Then reduce tyre pressure or add more air if necessary.
   Check filling pressure again.
7. Unscrew the compressor filling hose.

Reducing filling pressure on vehicles without level control

1. Switch off compressor.
2. Open air bleed screw on the filling hose until the correct filling pressure is achieved.

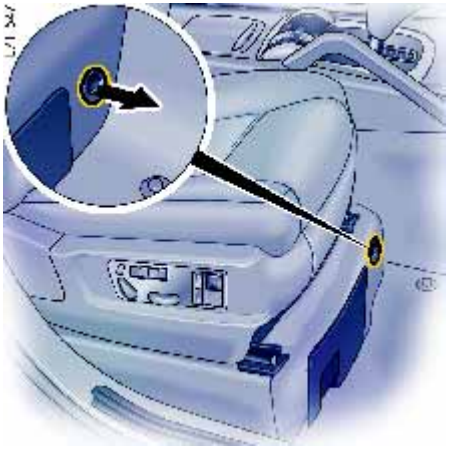

Inflating tyres on vehicles with level control

The bag with the tyre filling hose is located under the loadspace floor in the spare-wheel recess.

1. Take tyre filling hose out of the bag.
2. Remove cover in footwell of right front seat.

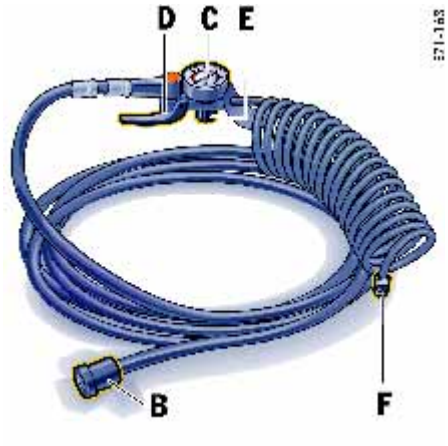

B - *Screw coupling for compressor connection*
C - *Pressure tester*
D - *Hand valve for tyre filling*
E - *Air bleed screw*
F - *Filler connection for tyre valve*

3. Screw the screw coupling **B** into the compressor connection (in footwell of the right front seat).
4. Screw filler connection **F** onto the tyre valve.

⚠ Warning!

Danger of injury and risk of damage if the operating unit is used improperly.

▷ Use this operating unit only to inflate or bleed air from the tyres of this vehicle.

5. Switch ignition on.
6. Press hand valve **D** until the correct tyre pressure is achieved.
   Monitor the tyre pressure with pressure tester **C** during the inflation process.
7. Unscrew the screw coupling from the compressor connection.
8. Unscrew filler connection from the tyre valve.
9. Stow tyre filler hose.

Note on operation

The compressor features a protective function against overheating and switches itself off automatically if necessary. The compressor must cool down for a few minutes after automatic deactivation.

Reducing tyre pressure on vehicles with level control

▷ Open air bleed screw **E** until the correct tyre pressure is achieved.
Monitor the tyre pressure with pressure tester **C** while correcting the tyre pressure.

Spare wheel

Warning!

Risk of accident. The wheel size, tyre size and tyre quality of the spare wheel and normal wheel may differ.
If a spare wheel is used that differs from the normal tyres used, this may impair the driving behaviour.

- ▷ The spare wheel must be used only over short distances in cases of emergency.
  For safety reasons, replace the tyres **before** the wear indicators appear (webs in the tyre grooves, 1.6 mm high).
- ▷ Never deactivate the Porsche Stability Management (PSM) system.
- ▷ If the tyre on the spare wheel is older than 4 years old, the spare wheel should be used only in the event of a flat tyre.
- ▷ Avoid hard acceleration and high cornering speeds.
  The maximum permitted speed is **80 km/h (50 mph)** if the mounted spare wheel differs from the other three wheels on the vehicle. This maximum speed must not be exceeded because of altered driving characteristics and for reasons of wear.

Removing spare wheel

Warning!

Danger of injury if the spare wheel is removed improperly.

- ▷ Remove the spare wheel only when the spare wheel bracket is locked.
- ▷ Remove the spare wheel from the spare wheel bracket with care. The wheel is very heavy (up to around 35 kg).

1. Loosen all 5 wheel bolts.
2. Remove the top wheel bolt.
   Remove assembly aid from the tool kit and screw in instead of the wheel bolt.
   Remove the remaining wheel bolts.

Fitting spare wheel

- ▷ Insert wheel bolts and tighten by hand.
  Remove assembly aid, screw in remaining wheel bolt.
  Initially tighten bolts only slightly in diagonally opposite sequence so that the wheel is centred.
- ▷ After mounting the wheel, tighten all 5 wheel bolts to **150 Nm (111 ftlb.)**.

B - *Button for unlocking the spare wheel bracket*

Opening spare wheel bracket

Warning!

Danger of injury and risk of accident if the spare wheel bracket is operated improperly.

- ▷ Make sure that no persons or animals are within the swivel range of the spare wheel bracket. Operate the spare wheel bracket only using button **B**.
- ▷ If the vehicle is inclined to the side, the additional lock **C** on the spare wheel bracket must be operated.

Precondition

The central locking system must be unlocked.

- ▷ Press button **B** and swing the spare wheel bracket open.

Notes on operation

- If the opening angle **exceeds 30°**, the spare wheel bracket automatically moves to its final position.
  The rear lid may be opened only when the spare wheel bracket is in its final position.
- If the opening angle is **less than 30°**, the spare wheel bracket automatically moves back to its initial position.
  However, the spare wheel bracket is not completely engaged yet and must be closed by hand.

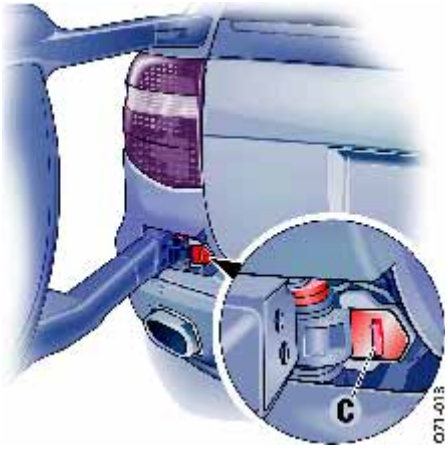

C - *Additional lock*

Operating the additional lock of the spare wheel bracket if the vehicle is tilted to the side

1. Open spare wheel bracket.
2. Slide additional lock **C** to the left.
   The spare wheel bracket is mechanically blocked.
   The warning light “rear lid” and a message on the multi-purpose display of the instrument panel warn the driver that the spare wheel bracket is open.

Closing spare wheel bracket

Warning!

Danger of injury and risk of accident if the spare wheel bracket is operated improperly.

- ▷ Operate the spare wheel bracket only using button **B**.
- ▷ If the vehicle is tilted to the side, more effort will be required to swing the spare wheel bracket.
- ▷ Make sure that no persons or animals are within the swivel range of the spare wheel bracket.

1. Check whether additional lock **C** is engaged. If necessary, slide additional lock **C** to the right.
2. Swing spare wheel bracket closed with force.
3. Check that the spare wheel bracket is locked and observe indication on the multi-purpose display of the instrument panel.
   The indicator light must go out when the spare wheel bracket is locked.

Automatic locking

In the multi-purpose display of the instrument panel, you can set variants of locking and unlocking the doors and the rear lid as well as the check-back signal when locking and unlocking the vehicle and save them on the respective remote control.

To do this: Please observe the chapter “SETTING REAR LID LOCKING” on Page 146.

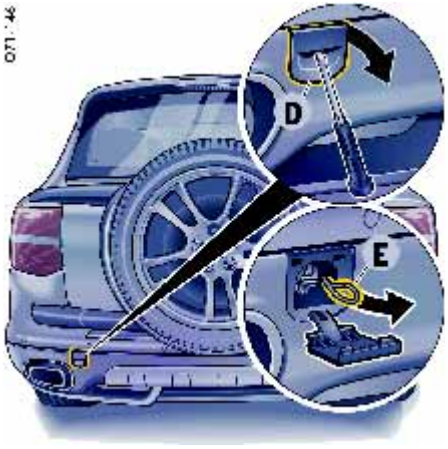

D - *Towing lug cover (left)*
E - *Emergency release cable*

Emergency release for the spare wheel bracket

If the battery is flat, the only way to open the spare wheel bracket is by using the mechanical emergency release.

Warning!

Danger of injury and risk of accident if the spare wheel bracket is operated improperly.

▷ Perform emergency unlocking of the spare wheel bracket only when the vehicle is on a level surface.

1. Remove cover of left towing lug **D**.
2. Pull emergency release cable **E** in the direction of the arrow.
   The spare wheel bracket is now unlocked and can be operated.

Electrical system

In order to avoid damage and faults in electrical or electronic systems, electrical accessories should be installed by a qualified specialist workshop. We recommend that you use a Porsche partner for this work since these are staffed with trained personnel and have the necessary parts and tools.

▷ Use only accessories authorised by Porsche.

⚠ Warning!

Risk of short circuit and fire.

▷ Disconnect the battery during all work on the electrical system.

Relays

Relays should be checked or changed only by an authorised workshop.

Sockets

The assignment and number of sockets depend on the respective vehicle equipment.

Electrical accessories can be connected to the 12 V sockets.

Note on operation

The sockets and thus the connected electrical accessories function even if the ignition is switched off or the ignition key is withdrawn.
If the engine is not running and the accessories are switched on, the vehicle battery will be discharged.

Changing fuses

In order to prevent damage to the electrical system due to short circuits and overloads, the individual circuits are protected by fuses.

One fuse box is in the engine compartment. Two additional fuse boxes are located in the outer ends of the dashboard.

1. Switch off the load with the defective fuse.
2. Open the fuse-box lid.
3. Remove the corresponding fuse from its slot to check it with the plastic gripper.
   A blown fuse can be identified by the melted metal strip.
4. Replace only with fuses of the same rating.

Note

▷ If a fuse blows repeatedly:
Consult a qualified specialist workshop. We recommend that you use a Porsche partner for this work since these are staffed with trained personnel and have the necessary parts and tools.

Cover of engine-compartment fuse box

Fuse box in engine compartment

Opening fuse-box lid in engine compartment

1. Rotate the turn-locks 90° counter-clockwise with a screwdriver and remove the cover.
2. Rotate the turn-locks of the fuse-box lid 90° counter-clockwise with a screwdriver and remove the lid.

Opening fuse-box lid in the dashboard

1. Carefully lever off the plastic cover with a screwdriver (**arrow**) and remove.
   The fuse plan is located on the inside of the cover.

A - *Plastic gripper*

2. Carefully remove the fuses with plastic gripper **A**.

Fuse assignment – fuse box in left side of dashboard

No.	Designation	Rating in A
1	Centre console socket, cigarette lighter	20
2	Parking heater radio receiver	5
3	Socket in passenger footwell	20
4	Parking heater	20
5	Sockets in luggage compartment	20
6	not used	
7	Diagnostic socket, rain sensor, light sensor	5
8	Wiper motor for windscreen	30
9	Vehicle electrical system control unit, pump for washer fluid	15
10	Power window, rear left	25
11	Central locking system, left	15
12	not used	
13	not used	
14	Power window, front left	25
15	Tail light, right	15
16	Vehicle electrical system control unit, horn	20
17	Vehicle electrical system control unit, left direction indicator, right parking light, left dipped beam	30
18	Headlight washer system	20
19	Vehicle electrical system control unit, interior light	5
20	Instrument lighting, left fog light, left additional high beam	30

No.	Designation	Rating in A
21	not used	
22	Rear differential lock, automatic rear lid	30
23	Differential lock	10
24	Tyre Pressure Monitoring	5
25	not used	
26	Engine control unit (engine management, radiator fans), airbag, instrument panel	10
27	not used	
28	not used	
29	not used	
30	not used	
31	not used	
32	not used	
33	Steering column module	15
34	Passenger compartment monitoring, inclination sensor	5
35	Vehicle electrical system control unit, right fog light, right additional high beam, interior light	30
36	Electrical seat adjustment, left	30
37	not used	
38	not used	
39	Heated rear window	5
40	Instrument panel, diagnosis	5
41	Steering column lock, ignition lock, central locking system, Porsche Entry & Drive	15
42	Sliding/lifting roof or Panorama roof system	30
43	Subwoofer	30

No.	Designation	Rating in A
44	Electrical seat adjustment, left; electrical steering column adjustment	30
45	Seat heating, rear	30
46	not used	
47	Rear differential lock	10
48	not used	
49	Servotronic	5
50	not used	
51	Air conditioner, diagnosis, moving-off assistant	5
52	Rear wiper	30
53	Vehicle electrical system control unit, automatic dipped beam, steering column module	5
54	Headlight beam adjustment	10
55	not used	
56	Fan, front air-conditioning system	40
57	Fan, rear air-conditioning system	40
RES 1	Spare fuse 1	
RES 2	Spare fuse 2	

Fuse assignment – fuse box in right side of dashboard

No.	Designation	Rating in A
1	Trailer coupling	15
2	ParkAssist	5
3	Trailer coupling	15
4	Telephone/telematics	5
5	Trailer coupling	15
6	Porsche Stability Management (PSM)	30
7	Transfer box (centre-differential lock), telephone preparation	5
8	Vehicle electrical system control unit, left parking light, right direction indicator, right dipped beam	30
9	CD changer, DVD navigation	5
10	TV tuner, satellite receiver	5
11	Radio or Porsche Communication System (PCM)	10
12	Amplifier for sound package	30
13	not used	
14	Tail light, left	15
15	Power window, rear right	25
16	not used	
17	not used	
18	Heated rear window relay	30
19	Trailer coupling	25
20	not used	

No.	Designation	Rating in A
21	Spare wheel release, horn for alarm system	10
22	Electrical seat adjustment front right, front seat heating	30
23	Air conditioner	10
24	Seat memory, front right; electrical seat adjustment, front right	30
25	Air conditioner, rear	5
26	Xenon headlight, right	10
27	Level control	15
28	not used	
29	Transmission control unit, Tiptronic selector lever switch	10
30	Rear lid power closing mechanism	20
31	Central locking system, filler flap	15
32	Central locking system, right doors	10
33	not used	
34	Power window, front right	25
35	Electrical seat adjustment, right	30
36	Roof console, telephone, compass	5
37	Xenon headlight, left	10
38	Porsche Stability Management	10
39	Diagnosis	5
40	Transfer box (centre-differential lock)	10
41	Trailer coupling	10
42	Roof module	5
43	Reversing light	5

No.	Designation	Rating in A
44	Heatable washer nozzles, air suspension, seat heating	5
45	not used	
46	not used	
47	Telephone preparation	10
48	Level control	10
49	Telephone, anti-dazzle interior mirror	5
50	Vehicles for Japan: blind spot detection	5
51	Tiptronic transmission	15
52	Tiptronic selector lever switch	5
53	not used	
54	not used	
55	Reversing camera	5
56	Porsche Stability Management (PSM)	40
57	Transfer box (centre-differential lock)	40

Fuse assignment – fuse box in Cayenne engine compartment

No.	Designation	Rating in A
1	Fan	60
2	Fan	30
3	not used	
4	not used	
5	not used	
6	not used	
7	Ignition coils	15
8	Ignition coils	15
9	Engine control unit, high-pressure fuel injectors, throttle adjusting unit	20
10	Water run-on pump, tank leakage detection, carbon canister shut-off valve, fan, pressure sensor for air conditioner	10
11	Air-conditioning compressor, service interval sensor, crankcase vent	10
12	Camshaft adjustment, tank vent, quantity control valve	15
13	Fuel pump, right	15
14	Fuel pump, left	15
15	Engine control unit, main relay	10
16	not used	
17	Oxygen sensors ahead of catalytic converter	15
18	Oxygen sensors behind catalytic converter	7.5

Note

▷ Use the plastic grippers from the fuse boxes in the dashboard to replace the fuses.

Fuse assignment – fuse box in Cayenne S engine compartment

No.	Designation	Rating in A
1	Fan	60
2	Fan	30
3	not used	
4	not used	
5	not used	
6	not used	
7	Ignition coils	15
8	Tank vent, air-conditioning compressor, intake pipe switchover, crankcase vent	15
9	Quantity control valve, camshaft adjuster, valve lift adjuster	15
10	Engine components: Cooling air output stages, carbon canister shut-off valve, pressure sensor for air conditioner, tank leakage detection, exhaust flap control valve, Hall sensor, oil-level sensor	10
11	Engine control unit, high-pressure fuel injectors, throttle adjusting unit	20
12	not used	
13	Fuel pump, right	15
14	Fuel pump, left	15
15	Engine control unit, main relay	10
16	not used	
17	Oxygen sensors ahead of catalytic converter	15
18	Oxygen sensors behind catalytic converter	7.5

Note

▷ Use the plastic grippers from the fuse boxes in the dashboard to replace the fuses.

Battery

Danger!

Danger of explosion and injury and risk of short circuit and damage to the generator and electronic control units.

▷ Have the battery removed and installed only at a specialist workshop.

The battery is located in the battery box under the left front seat.

Warning!

Risk of short circuit and fire.

▷ Disconnect the battery during all work on the electrical system.

▷ Ensure that tools or conductive jewellery (rings, chains, watch straps) do not come into contact with live parts of the vehicle.

Danger of explosion

▷ Do not wipe battery with a dry cloth.

▷ Before touching the battery, discharge any static electricity by touching the vehicle.

Heed warnings on the battery

Read the operating instructions

Wear eye protection

Keep children away

Danger of explosion
While the battery is being charged, a highly explosive gas mixture is formed, so:

Fire, sparks, naked flames and smoking are prohibited
Avoid causing sparks and short circuits when handling cables and electrical equipment.
In the case of batteries with central venting, there is a greater concentration of explosive gas at the hose opening. The gas-venting hose must not be kinked or blocked with dirt.

Danger of caustic burns
Battery acid is highly caustic, so:
Wear safety gloves and eye protection.
Do not tip the battery, or acid may spill from the venting aperture.

First aid
If acid splashes into an eye, immediately rinse with clean water for a few minutes. See a doctor immediately.
If acid splashes onto skin or clothing, neutralise immediately with soapsuds and rinse with plenty of water.
If you accidentally drink acid, consult a doctor immediately.

Disposal
Hand in the old battery at a battery collection point.

Never dispose of an old battery with domestic waste.

Charge state

A well-charged battery prevents starting problems and has a longer service life.
Traffic density, speed limits, requirements regarding noise, exhaust gas and fuel consumption reduce the engine speed and, hence, the generator output.
However, the large number of electrical loads has markedly increased the demand for electrical power.

In order to avoid unintended battery discharge:

- ▷ Switch off unnecessary electrical loads in city traffic, on short trips and in queues.
- ▷ Always withdraw the ignition key when leaving the vehicle or
  switch ignition off on vehicles that have Porsche Entry & Drive.
- ▷ Avoid using the Porsche Communication Management system and the audio system when the engine is not running.
- ▷ For information on charging an exhausted battery: Please observe the chapter "CHARGING THE BATTERY" on Page 337.

Maintenance note

In the cold season in particular, it may become necessary to recharge the battery from time to time.

Battery care

- ▷ Keep battery surface clean and dry.
- ▷ Ensure that cell plugs and terminal clamps are firmly secured.

Checking acid level (only on low-maintenance batteries)

Check the acid level more frequently in the summer months and in predominantly warm countries.

- ▷ When topping up, use only clean vessels. In no case may alcohol (e.g. window cleaner residues) be permitted to enter the battery.
- ▷ Unscrew all plugs.
  With the vehicle horizontal, the battery acid must fill each cell up to the filler mark. These filler marks are visible through the plug openings as steps or lateral lugs in the battery.
- ▷ Top up with distilled water if necessary.
  Do not use acid. Do not overfill.

Winter driving

The ability of the battery to deliver power decreases at low outside temperatures.
Moreover, the battery is more heavily loaded in the winter months by the heated rear window, more frequent use of additional lights, the blower and the windscreen wipers, etc.

- ▷ Have the charge state of the battery checked before winter begins.

Maintenance note

Keep the battery fully charged to prevent it from freezing.
A discharged battery can freeze even at –10 °C, but a fully charged one only freezes at –40 °C.

Laying up the vehicle

If the vehicle stands for long periods in the garage or workshop, the doors and lids should be closed.

▷ Withdraw the ignition key and, if necessary, disconnect the battery.

Notes on operation

▷ When the battery is disconnected, the alarm system ceases to function.
If the vehicle was locked before the battery was disconnected, the alarm will be triggered when the battery is reconnected.
To deactivate the alarm system:

▷ Lock the vehicle and unlock it again.

Alarm system, central locking

▷ The status of the central locking and alarm system is not changed by disconnecting the battery.

Maintenance notes

Even if you put your vehicle out of operation, the battery still discharges.

▷ To preserve its operating capability, charge the battery about every 6 weeks.

▷ Check the battery acid level and top up with distilled water if necessary.

▷ Store a battery that has been removed in a dark, cool place, but not subject to frost.

Replacing the battery

The battery is subject to normal wear: its service life depends greatly on the care you give it, climatic conditions and the conditions of use (distances, loads).

It is not possible to use the details on the battery case to determine a comparable battery that meets all the specific requirements of Porsche.

▷ Only replace the battery with one that satisfies the specific requirements of your vehicle.
We recommend that you use a genuine Porsche battery.

▷ Please observe the disposal instructions for batteries.

Putting vehicle into operation

After the battery is connected or after an **exhaustively discharged** battery is charged, the PSM warning light lights up on the instrument panel and a message appears on the multi-purpose display of the instrument panel to indicate a fault.

This fault can be remedied with a few simple steps:

1. Start the engine.
   To do this, turn the ignition key or the control unit (on vehicles with Porsche Entry & Drive) to ignition lock position **2 twice**.
2. With the vehicle stationary, perform a few steering movements to the left and right and then drive a short distance in a straight line until the PSM warning light goes out and the message is erased from the multi-purpose display of the instrument panel.
3. If the warnings do **not** disappear, then:
   Drive carefully to the nearest qualified specialist workshop.
   Have the fault remedied.
4. After the warnings disappear:
   Stop the vehicle in a suitable place.
5. Perform teaching of the power windows. To do this:
   Please observe the chapter “STORING FINAL POSITION OF THE DOOR WINDOWS AFTER CONNECTING THE VEHICLE BATTERY” on Page 91.
6. Teach tyres on vehicles with Tyre Pressure Monitoring. To do this:
   Please observe the chapter “SETTING TYRE PRESSURE MONITORING” on Page 135.
7. Store end positions on vehicles with electrically folding trailer coupling. To do this:
   Please observe the chapter “STORING END POSITIONS OF THE TRAILER COUPLING” on Page 252.
8. Store end position on vehicles with Panorama roof system. To do this:
   Please observe the chapter “STORING FINAL POSITION OF THE PANORAMA ROOF SYSTEM” on Page 100.

Replacing the remote control battery

Note

▷ Please observe the disposal instructions for batteries.

Vehicle key

If the battery in the remote control becomes too weak, a warning will appear on the multi-purpose display in the instrument panel.
The battery should be changed in this case.

Changing the battery

1. Lever out the lid on the back of the key housing with a small screwdriver.
2. Replace battery (observe polarity).
3. Replace cover and press together firmly.

Parking heater remote control

The battery should be changed when the range of the remote control becomes smaller or when the light-emitting diode lights up orange when the remote control is operated.

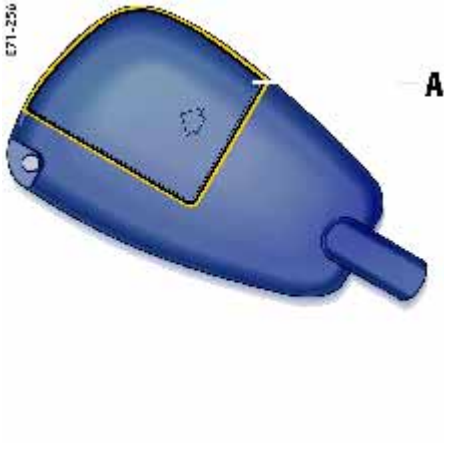

Changing the battery

1. Pull battery compartment cover **A** off in the direction of the arrow.
2. Remove batteries.
3. Insert new batteries. Make sure that the polarity is correct.
   The remote control contains two 12 V batteries.
4. Close battery compartment **A**.

External power supply, jump lead starting

If the battery is flat, the battery of another vehicle can be used for starting or as an external power supply with the help of jump leads.
Both batteries must be 12 V types. The capacity (Ampere hours, Ah) of the donor battery must not be substantially less than that of the discharged battery.
The discharged battery must be correctly connected to the vehicle's electrical system.

⚠ Warning!

Risk of damage and injury due to short circuit.

- ▷ Use only standard jump leads with sufficient cross section and completely insulated clamps. Follow the jump lead manufacturer's instructions.
- ▷ Route the jump leads so that they cannot be caught by moving parts in the engine compartment.
  The vehicles must not be in contact, otherwise current might flow as soon as the positive terminals are connected.
- ▷ Carefully ensure that conductive jewellery (rings, chains, watch straps) does not come into contact with live parts of the vehicle.

Risk of caustic burns from escaping acid.

- ▷ Do not lean over the battery.

Danger of gas explosion.

- ▷ Keep sources of ignition away from the battery, e.g. naked flame, burning cigarettes or sparks due to cable contact.
- ▷ Before connecting jump leads, it is essential to thaw out a frozen battery.

Jump lead starting

Always observe the sequence below:

1. Remove cover **A**.
2. Open the cap of the positive terminal for jump lead starting (**+**).
3. Attach the positive lead first to the positive terminal for jump lead starting (**+**), then to the positive terminal of the donor battery.

+ = Positive terminal for jump lead starting
– = Ground point for jump lead starting

4. Connect the negative lead first to the negative terminal of the donor battery, then to the ground point for jump lead starting (–).
5. Run the engine of the donor vehicle at a higher speed.
6. Start the engine.
   An attempted start using jump leads should not last more than 15 seconds. Then allow a waiting period of at least one minute.
7. Disconnect the negative lead from the ground point for jump lead starting (–) first, then from the negative terminal of the donor battery.
8. Disconnect the positive lead from the positive terminal of the donor battery first, then from the positive terminal for jump lead starting (+).
9. Close the cap of the positive terminal for jump-lead starting (+).

Charging the battery

Your Porsche partner will be pleased to advise you about a suitable charger.

1. Always observe the instructions of the charger manufacturer.
2. When charging the battery, ensure adequate ventilation.
3. Check the acid level in the case of low-maintenance batteries.
4. Connect charger to the jump lead starting points.
   Only plug into the mains and switch the charger on when it has been correctly connected up.
5. After charging, disconnect the charger.
6. Check the acid level in the case of low-maintenance batteries.

After charging the battery

After the battery is connected or after an **exhaustively discharged** battery is charged, the PSM warning light lights up on the instrument panel and a message appears on the multi-purpose display of the instrument panel to indicate a fault.

This fault can be remedied with a few simple steps:

1. Start the engine.
   To do this, turn the ignition key or the control unit (on vehicles with Porsche Entry & Drive) to ignition lock position **2 twice**.
2. With the vehicle stationary, perform a few steering movements to the left and right and then drive a short distance in a straight line until the PSM warning light goes out and the message is erased from the multi-purpose display of the instrument panel.
3. If the warnings do **not** disappear, then have the fault repaired.
   Consult a qualified specialist workshop. We recommend that you use a Porsche partner for this work since these are staffed with trained personnel and have the necessary parts and tools.
4. After the warnings disappear:
   Stop the vehicle in a suitable place.
5. Perform teaching of the power windows. To do this:
   Please observe the chapter “STORING FINAL POSITION OF THE DOOR WINDOWS AFTER CONNECTING THE VEHICLE BATTERY” on Page 91.
6. Teach tyres on vehicles with Tyre Pressure Monitoring:
   Please observe the chapter “SETTING TYRE PRESSURE MONITORING” on Page 135.
7. Store end positions on vehicles with electrically folding trailer coupling. To do this:
   Please observe the chapter “STORING END POSITIONS OF THE TRAILER COUPLING” on Page 252.
8. Store end position on vehicles with Panorama roof system. To do this:
   Please observe the chapter “STORING FINAL POSITION OF THE PANORAMA ROOF SYSTEM” on Page 100.

Replacing bulbs

Warning!

Danger of short circuit.

▷ Always switch off the relevant load when changing bulbs.

Risk of injury. The headlights are under high voltage when installed.

▷ Exercise extreme caution when working in the area of the headlights.

Risk of damage. Bulbs of a higher wattage can damage the housing.

▷ Only use the bulbs specified in the bulb chart.

▷ Bulbs must be clean and free from grease.

▷ Never touch bulbs with your bare hands. Use a cloth or soft paper when replacing bulbs.

▷ Always carry spare bulbs with you. In certain countries, carrying spare bulbs is mandatory.

Headlights

Caution!

Risk of damage to headlights due to abrasion and excessive temperatures.

▷ Do not fix any coverings (e.g. “stone guards” or films) in the area of the headlights.

Note

The headlights can mist up depending on the temperature and humidity.

▷ To ensure optimum ventilation, do not cover the gap between headlight and body.

Removing headlights

1. Switch off ignition and withdraw the ignition key.
2. Open bonnet.
3. Press down cover **A** in the engine compartment in the direction of the arrow and remove.

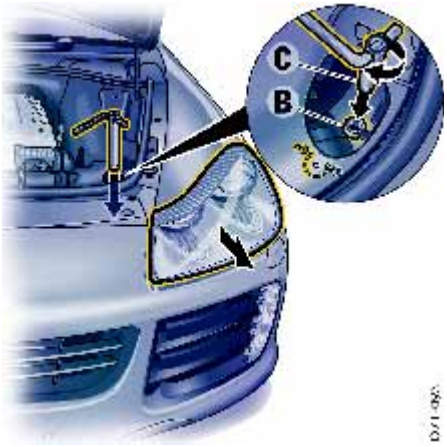

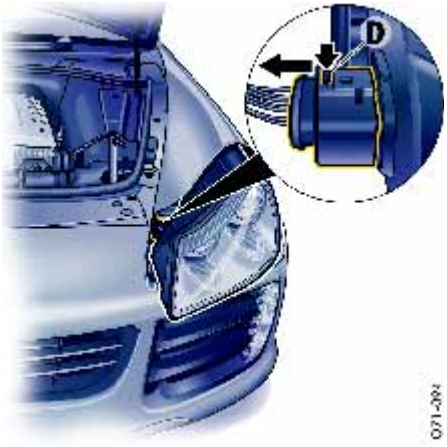

B - *Headlight release*
C - *Socket wrench*

4. Take socket wrench **C** out of the tool kit.
5. Place socket wrench **C** on the release **B** and turn in the direction of the arrow until you feel and hear the headlight being released.
6. Pull the headlight forward out of the wing by approx. 10 cm.
7. Press back the release tab of the plug **D** and pull plug off.
8. Pull out headlight completely.

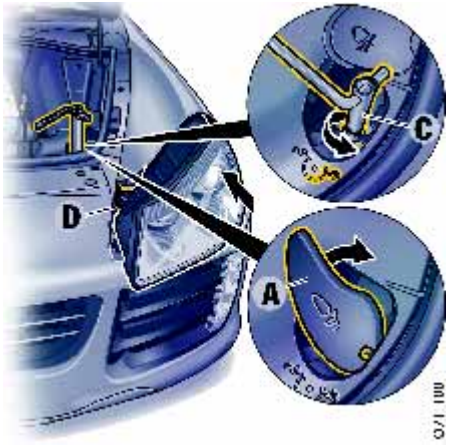

A - *Cover*
C - *Socket wrench*
D - *Connector*

Installing headlights

1. Insert headlight in the guide rails, connect plug **D** and then push the headlight fully into the wing.
2. Push headlight to the rear and simultaneously turn socket wrench **C** in the direction of the arrow.
   The headlight locking device must perceptibly and audibly engage.
3. Check whether the headlight is seated securely.
4. Remove socket wrench **C** and replace in tool kit.
5. Fit cover **A** and fold it down.
6. Close bonnet.

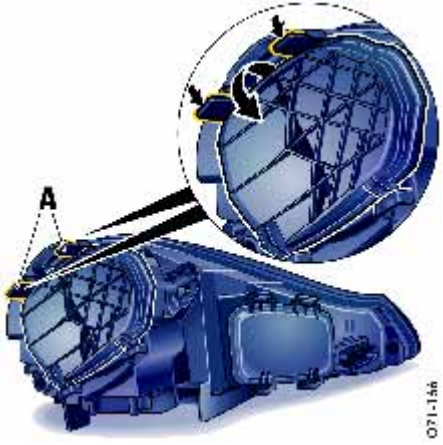

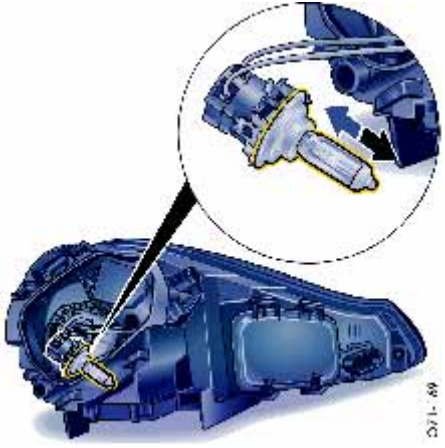

Halogen headlights

Changing bulb for dipped beam/high beam

1. Press down both release tabs **A** and remove cover.
2. Turn bulb socket **B** counter-clockwise and remove.
3. Remove defective bulb and replace.
4. Insert bulb socket and turn in clockwise direction.
   Make sure that the bulb is installed in the correct position.
5. Fit cover on headlight.
   Both release tabs must be fully engaged.
6. Install headlight.
7. Check operation of bulbs.
8. Close bonnet.

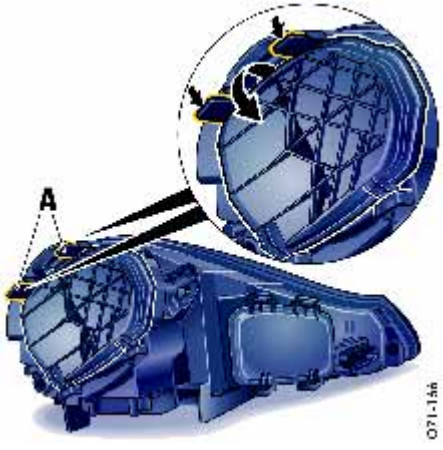

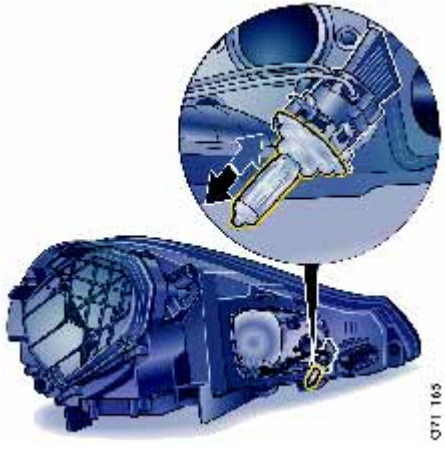

Changing bulb for additional high beam

1. Press down both release tabs **A** and remove cover.
2. Turn bulb socket **B** counter-clockwise and remove.
3. Remove defective bulb and replace.
4. Insert bulb socket and turn in clockwise direction.
   Make sure that the bulb is installed in the correct position.
5. Fit cover on headlight.
   Both release tabs must be fully engaged.
6. Install headlight.
7. Check operation of bulbs.
8. Close bonnet.

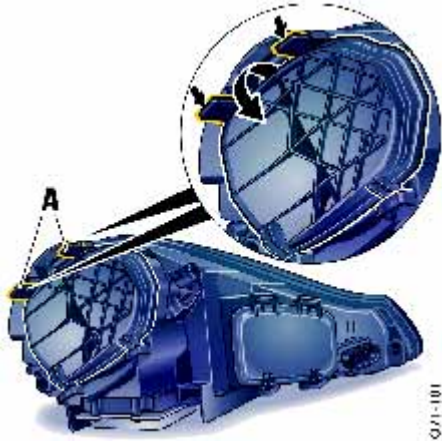

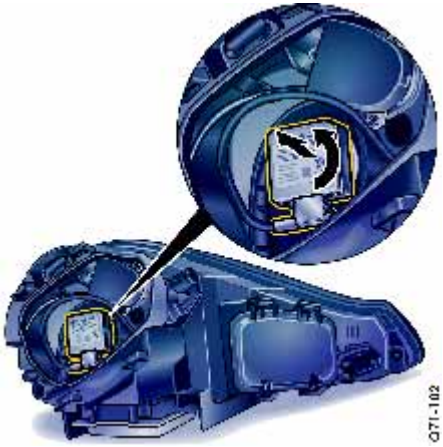

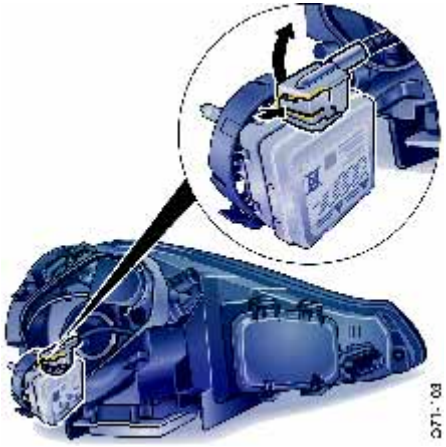

Bi-Xenon headlights with cornering light

Changing gas discharge lamp for dipped beam/high beam/dynamic cornering light

1. Press down both release tabs **A** and remove cover.
2. Turn gas discharge lamp counter-clockwise and remove.
3. Press the release tab on the plug and pull plug off.
4. Connect plug to new gas discharge lamp.
5. Insert gas discharge lamp and turn in clockwise direction. Make sure that the bulb is installed in the correct position.
6. Fit cover on headlight. Both release tabs must be fully engaged.
7. Install headlight.
8. Check operation of bulbs.
9. Close bonnet.

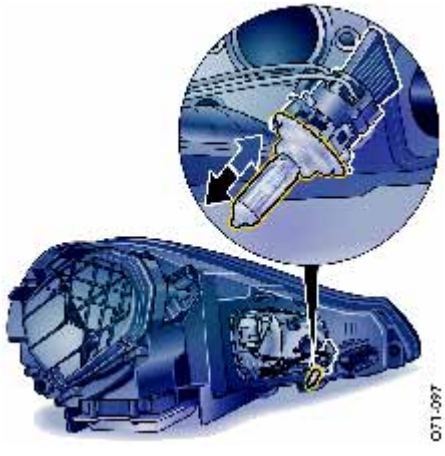

Changing bulb for additional high beam

1. Press down both release tabs **A** and remove cover.
2. Turn bulb socket **B** counter-clockwise and remove.
3. Remove defective bulb and replace.
4. Insert bulb socket and turn in clockwise direction. Make sure that the bulb is installed in the correct position.
5. Fit cover on headlight. Both release tabs must be fully engaged.
6. Install headlight.
7. Check operation of bulbs.
8. Close bonnet.

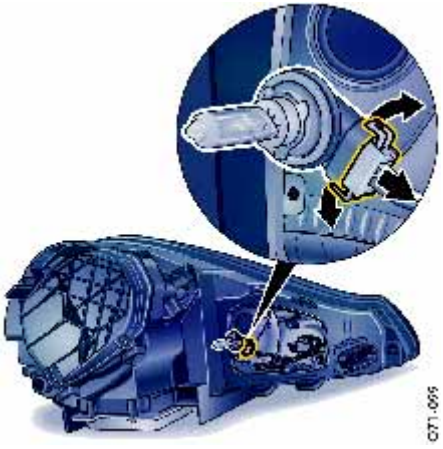

Changing lamp for static cornering light

1. Press down both release tabs **A** and remove cover.
2. Turn bulb socket **B** counter-clockwise and remove.
3. Pull both release tabs on the plug apart, and pull plug out of lamp socket.
4. Replace defective bulb. Make sure that the bulb is installed in the correct position.
5. Fit cover on headlight. Both release tabs must be fully engaged.
6. Install headlight.
7. Check operation of bulbs.
8. Close bonnet.

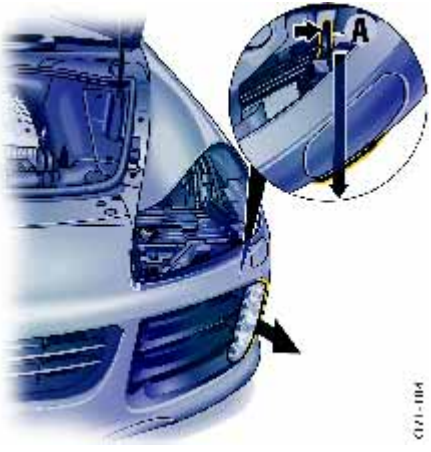

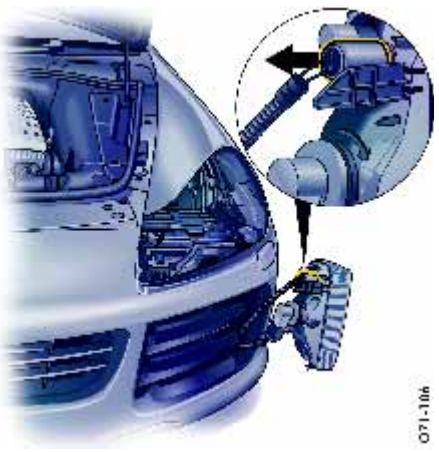

Changing bulb for direction indicator and parking light

▷ Please observe the chapter “REMOVING HEADLIGHTS” on Page 339.

1. Open bonnet.
2. Remove headlight.
3. Press release tab on the bulb housing in the direction of the arrow and at the same time push forward to the first detent **A**.
4. Press release tab **A** in direction of arrow again and push forward. Using your other hand, pull the bulb housing completely out of the front apron.

Replacing parking light bulb

5. Pull bulb socket out of the bulb housing.

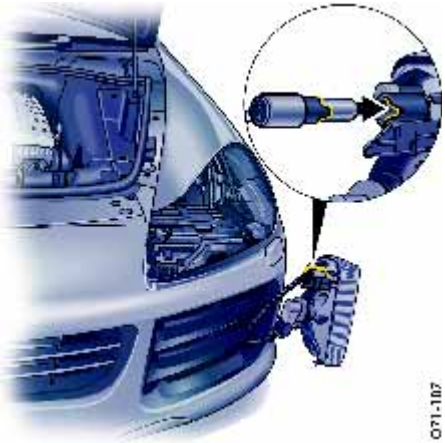

6. Remove the defective bulb from the socket and replace.
   When inserting the socket in the bulb housing, make sure that the socket has engaged fully.

Changing direction indicator bulb

1. Turn socket counter-clockwise and remove.
2. Replace the defective bulb (bayonet fitting).
3. Insert socket and turn in clockwise direction. Make sure that the bulb is installed in the correct position.

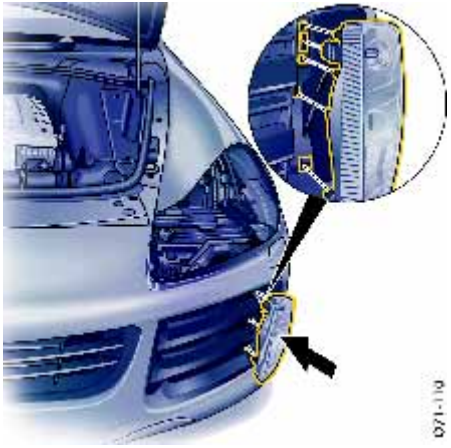

Installing bulb housing

1. Insert the bulb housing in the front apron. Make sure that the two tabs are inserted correctly in the openings. Push light fully into the front apron until you hear and feel it engage.
2. Check operation of lights.
3. Install headlight.
4. Close bonnet.

Tail light

Removing tail light

As a result of the design, a relatively large amount of effort is required to remove the tail light.
In case of doubt, please consult a qualified specialist workshop.
We recommend that you use a Porsche partner for this work since these are staffed with trained personnel and have the necessary parts and tools.

1. Switch ignition off.
2. Open rear lid.
3. Remove the two caps **A** with a screwdriver, for example.
4. Unscrew the two fastening screws **B** with the socket wrench from the tool kit.

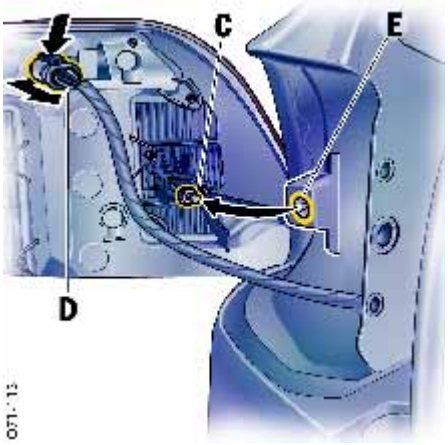

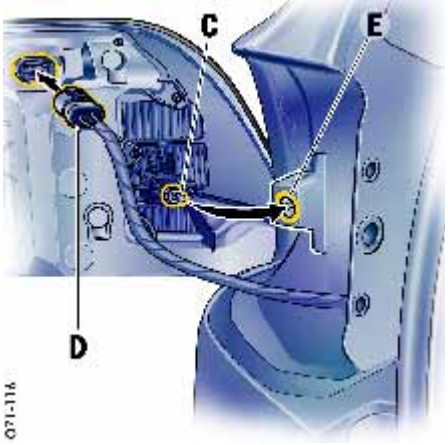

5. Pull out the light unit to the side in the **direction of the arrow** and additionally pull it out in the area of the ball head **C**.
6. Disengage cable and then press on the plug release (**arrow**) on the plug **D** and pull off the plug.

Installing tail light

1. Push on plug **D** until the plug is felt to click into place (**arrow**) and secure cable.
2. Insert ball head of tail light **C** into clip nut **E** and fit the light unit into the body (**arrow**).
3. Screw in the fastening screws **B**.
   When screwing in the fastening screws, make sure that the tail light is flush with the body.
4. Press in caps **A**.

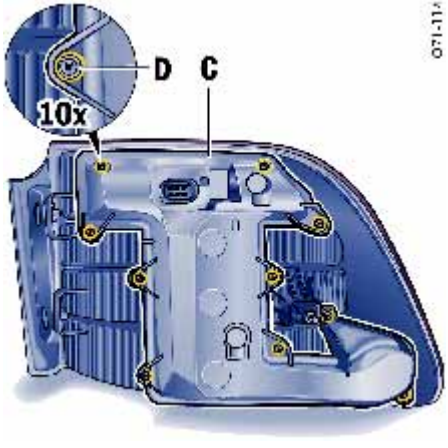

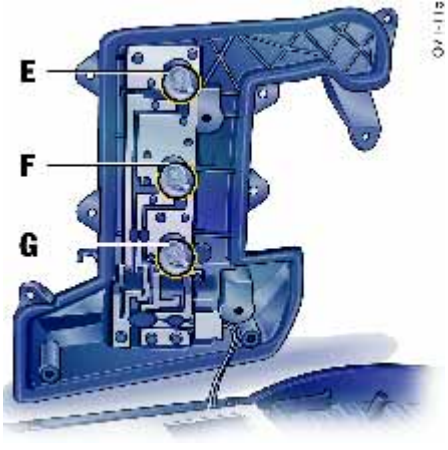

Replacing bulbs at rear

1. Unscrew fastening screws **D** with the cross-head screwdriver from the tool kit.
2. Remove lamp bracket **C**.

E - *Rear fog light*
F - *Direction indicator*
G - *Reversing light*

3. Replace the defective bulb (bayonet fitting). Insert lamp bracket and screw in fastening screws.
4. Install tail light.
5. Check operation of lights.
6. Close the rear lid.

Number plate lights

Changing bulb for number plate light

1. Unscrew both screws **A** and remove the light.
2. Push the bulb holder apart and pull the bulb out of the socket.
3. Replace defective bulb.
4. Insert light, initially tighten both screws **A** and then screw in uniformly.

Headlight adjustment

The adjustment of the headlights should only be done in a specialist workshop with suitable adjustment equipment.
The adjustment is made with the vehicle ready to drive and the fuel tank completely filled.

Changing headlights from left to right-hand traffic

If you travel to a country where traffic uses the other side of the road, the headlights must be repositioned when you cross the border. The dipped beam then lights symmetrically and drivers of oncoming vehicles are not dazzled.

On the return journey, do not forget to readjust the headlights.

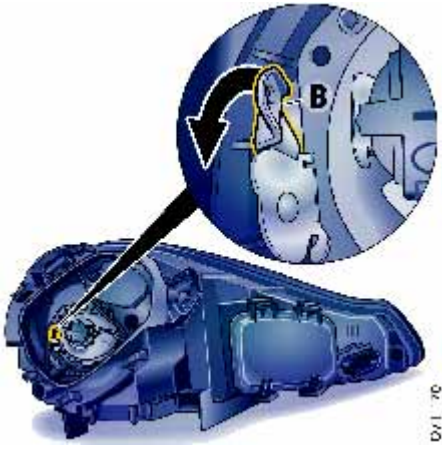

Repositioning headlights

1. Please observe the chapter “REMOVING HEADLIGHTS” on Page 339.
   Remove headlight. Press down both release tabs **A** and remove cover.

Halogen headlights

2. On vehicles with halogen headlights:
   Push lever **B** down to the stop.

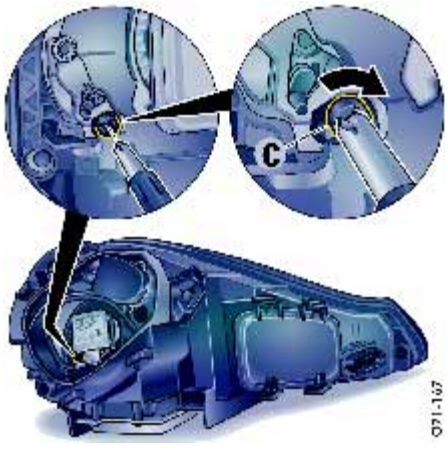

Xenon headlight

2. On vehicles with Xenon headlights:
   Turn spindle **C** in clockwise direction to the stop using a crosshead screwdriver.
3. Fit cover on headlight.
   Both release tabs **A** must be fully engaged.
4. Please observe the chapter “INSTALLING HEADLIGHTS” on Page 341.
   Install headlight.
5. Reposition the other headlight.

Bulb chart

Exterior lights	Type, rating
Halogen dipped beam and high beam	H7
Xenon dipped beam and high beam	D1S
Side marker light, front	W5W
Direction indicator, rear	P21W
Direction indicator, front	PY21W
Number plate light	C5W
Fog light	H11
Rear fog light	P21W
Reversing light	P21W
Side indicator light	WY5W
Additional high beam	H7
Cornering light	H11

Interior lights	Type, rating
Interior light, front	W5W
Reading light	W5W
Luggage compartment light	K12V10W
Footwell light	W3W
Glove compartment light	W3W
Centre console	W3W
Kerb lights (doors)	W3W
Warning lights (doors)	W3W
Kerb light (rear lid)	W5W
Guard light (rear lid)	W5W

Towing and tow-starting

Tips on driving

- ▷ Always observe the laws governing towing and tow-starting.
- ▷ Exercise great care when on tow.
  Before starting off, both drivers should familiarise themselves with the special conditions which apply to tow-starting and towing.
- ▷ When the direction indicator light is set with the ignition on and the hazard warning lights active, only the direction indicator light on the corresponding side of the vehicle will light up. After the direction indicator light is reset, the hazard warning lights will be switched on again.

Towing rope

- ▷ Please refer to the separate manual from the accessory manufacturer for the data and fitting instructions.
  Observe the manufacturer's safety and operating instructions.
- ▷ Always observe the permissible towing force of the towing rope. The towing rope must be approved for the vehicle weight. Never exceed the manufacturer’s specifications.
- ▷ Vehicles with a faulty brake must **not** be towed.
- ▷ Always keep the towing rope taut when towing. Avoid jerky, sudden loads.

Towing bar

- ▷ Please refer to the separate manual from the accessory manufacturer for the data and fitting instructions.
  Observe the manufacturer's safety and operating instructions.
- ▷ Always observe the permissible towing force of the towing bar. The towing bar must be approved for the vehicle weight. Never exceed the manufacturer’s specifications.
- ▷ Do **not** attach the towing bar diagonally between the vehicles.
- ▷ Vehicles with a faulty brake must **not** be towed.

Tow-starting/push-starting

If the battery is defective or completely discharged, the engine can be started only by changing the battery or by using jump leads.

- ▷ For information on the battery:
  Please observe the chapter “BATTERY” on Page 332.
- ▷ For information on jump lead starting:
  Please observe the chapter “EXTERNAL POWER SUPPLY, JUMP LEAD STARTING” on Page 336.

Vehicles with Tiptronic

- ▷ Do not tow-start or push-start vehicles **with a Tiptronic** transmission.
  The vehicle cannot be tow-started or push-started, nor should this be attempted due to the risk of serious engine damage.

Vehicles with manual transmission

- ▷ Only tow-start or push-start vehicles fitted with a catalytic converter when the engine is cold. If the engine is warm, unburned fuel could damage the catalytic converter.

Towing

If you have to tow a vehicle, it should not be heavier than your own vehicle.

Warning!

Risk of accident. No servo assistance is available on the towed vehicle when its engine is not running. Greater force is therefore necessary when braking and steering.

▷ Exercise great care when on tow.

When the engine is stationary, adequate lubrication of the transmission is not guaranteed. Observe the following points to avoid damage to the transmission:

▷ Put the gearshift lever in neutral or move the Tiptronic selector lever to position **N**.
The Tiptronic selector lever can no longer be operated in the event of an electrical fault. Blocking of the Tiptronic selector lever in position **P** can be overridden manually. To do this:
Please observe the chapter “SELECTOR LEVER EMERGENCY OPERATION” on Page 182.

▷ The vehicle must always roll on all four wheels when towed.
The ignition must be switched on so that the brake lights and direction indicator lights operate and the steering lock cannot engage.

▷ Do not exceed the maximum speed of 50 km/h (30 mph).
Maximum towing distance 50 km (30 miles). If towing distances are greater, the vehicle must be transported with a car transporter or on a trailer.

Towing on a single axle

When the engine is stationary, adequate lubrication of the transmission is not guaranteed. Observe the following points to avoid damage to the transmission:

▷ It is normally not permissible to raise one axle, irrespective of whether it is the front or rear axle.
If circumstances dictate that the vehicle must be towed in this manner, the drive shaft (cardan shaft) of the rolling axle must be removed.

▷ Put the gearshift lever in neutral or move the Tiptronic selector lever to position **N**.

▷ Switch ignition off.
The ignition key must remain in the ignition lock so that the steering wheel lock does not engage.
The control unit must be removed from the ignition lock and the ignition key inserted on vehicles that have Porsche Entry & Drive. To do this:
Please observe the chapter “REMOVING THE CONTROL UNIT FROM THE IGNITION LOCK” on Page 164.

▷ Make sure that the vehicle is adequately illuminated.

▷ Do not exceed the maximum speed of 50 km/h (30 mph).
Maximum towing distance 50 km (30 miles). If towing distances are greater, the vehicle must be transported with a car transporter or on a trailer.

Pulling out a vehicle stuck in snow, sand, etc.

Always pull out the stuck vehicle with the greatest care.

Depending on the vehicle equipment, the spare-wheel well contains one or two towing lugs.

▷ When pulling out the vehicle, always use two towing lugs if possible.
Screw in the towing lugs only at the front or rear in each case.

▷ Do not pull out the vehicle abruptly or at an angle.

▷ If possible, pull the vehicle out backwards in its own tracks.

▷ Do not pull out the vehicle with a trailer attached.

Towing lug

Depending on the vehicle equipment, the spare-wheel well contains one or two towing lugs.

Screwing in rear towing lug

1. Carefully lever out the appropriate plastic cover **A** in the bumper with the screwdriver. The cover is captive and need not be removed completely.
2. Screw in towing lug **B** as far as the stop (left-hand thread) and tighten hand-tight.

Screwing in front towing lug

1. Carefully lever out the appropriate plastic cover **A** in the bumper with the screwdriver. Place cover in the vehicle.

2. Screw in towing lug **B** as far as the stop (left-hand thread) and tighten hand-tight.

Fitting plastic cover at front

▷ First engage the upper locking tabs of the plastic cover, and then press in the bottom tabs and side tab uniformly until the tabs have engaged fully.

Tyre Pressure and Technical Data

Vehicle identification.....361
Engine data.....363
Transmission.....364
Fuel consumption.....364
Tyres, rims, tracks.....365
Tyre pressures, cold.....367
Weights.....369
Ground clearance.....370
Capacities.....372
Dimensions.....373
Driving performance.....374

Vehicle identification

When ordering spare parts or making inquiries, please always quote the vehicle identification number.

Data bank

The vehicle data bank can be found on the left under the loadspace floor.
It contains all important data about your vehicle.

Note

The data bank cannot be reordered if it is lost or damaged.

Vehicle identification number

The vehicle identification number is under the loadspace floor on the right in front of the tool kit and at the bottom left behind the windscreen.

Identification plate

The identification plate is fitted on the firewall on the right of the engine compartment.

Tyre pressure plate

The tyre pressure plate is fitted on the driver's door.

Engine data

	Cayenne manual transmission	Cayenne Tiptronic S	Cayenne S manual transmission	Cayenne S Tiptronic S
Type	6-cylinder V-engine	6-cylinder V-engine	8-cylinder V-engine	8-cylinder V-engine
Number of cylinders	6	6	8	8
Bore	89 mm	89 mm	96 mm	96 mm
Stroke	96.4 mm	96.4 mm	83 mm	83 mm
Displacement	3598 cm^3	3598 cm^3	4806 cm^3	4806 cm^3
Max. engine output as per 80/1269/EEC	213 kW (290 HP)	213 kW (290 HP)	283 kW (385 HP)	283 kW (385 HP)
At engine speed	6200 rpm	6200 rpm	6200 rpm	6200 rpm
Max. torque as per 80/1269/EEC	385 Nm (285 ftlb.)	385 Nm (285 ftlb.)	500 Nm (370 ftlb.)	500 Nm (370 ftlb.)
At engine speed	3000 rpm	3000 rpm	3500 rpm	3500 rpm
Engine oil consumption	up to 1.5 l/1000 km	up to 1.5 l/1000 km	up to 1.5 l/1000 km	up to 1.5 l/1000 km
Maximum rpm	6700 rpm	6700 rpm	6700 rpm	6700 rpm

Transmission

Transmission ratio	Cayenne manual transmission	Cayenne Tiptronic S	Cayenne S manual transmission	Cayenne S Tiptronic S
1st gear	4.68 : 1	4.15 : 1	4.68 : 1	4.15 : 1
2nd gear	2.53 : 1	2.37 : 1	2.53 : 1	2.37 : 1
3rd gear	1.69 : 1	1.56 : 1	1.69 : 1	1.56 : 1
4th gear	1.22 : 1	1.16 : 1	1.22 : 1	1.16 : 1
5th gear	1.00 : 1	0.86 : 1	1.00 : 1	0.86 : 1
6th gear	0.84 : 1	0.69 : 1	0.84 : 1	0.69 : 1
Reduction gear	2.70 : 1	2.70 : 1	2.70 : 1	2.70 : 1
Reverse gear	4.27 : 1	3.39 : 1	4.27 : 1	3.39 : 1
Final drive ratio	3.70 : 1	4.30 : 1	3.55 : 1	3.55 : 1

Fuel consumption

Determined according to 80/1268/EEC as amended.

	City	Highway	Total	Total CO_2
	(l/100 km)	(l/100 km)	(l/100 km)	(g/km)
Cayenne manual transmission	18.5	9.8	12.9	310
Cayenne Tiptronic S	18.3	9.9	12.9	310
Cayenne S manual transmission	22.1	10.8	14.9	358
Cayenne S Tiptronic S	20.2	10.1	13.7	329

Tyres, rims, tracks

Cayenne	Tyres	Wheel front/rear	Rim offset front/rear	Track front	rear
Summer tyres	235/65 R 17 108 V XL[1)]	7.5 J x 17	53 mm	1655 mm	1670 mm
	255/55 R 18 109 Y XL[2)]	8 J x 18	57 mm	1647 mm	1662 mm
	275/45 R 19 108 Y XL	9 J x 19	60 mm	1641 mm	1656 mm
	275/40 R 20 106 Y XL	9 J x 20	60 mm	1641 mm	1656 mm
	275/40 R 20 106 Y XL	9 J x 20/10 J x 20	60 mm/55 mm	1641 mm	1666 mm
	295/35 R 21 107 Y XL	10 J x 21	50 mm	1661 mm	1676 mm
	295/35 R 21 107 Y XL	10 J x 21	50 mm/45 mm	1661 mm	1686 mm
Winter tyres	235/65 R 17 108 H XL[1)]	7.5 J x 17	53 mm	1655 mm	1670 mm
	255/55 R 18 109 V XL[2)]	8 J x 18	57 mm	1647 mm	1662 mm
	255/50 R 19 107 V XL[3)]	9 J x 19	60 mm	1641 mm	1656 mm
All-Season	235/65 R 17 108 V XL[1)]	7.5 J x 17	53 mm	1655 mm	1670 mm
	255/55 R 18 109 V XL[2)]	8 J x 18	57 mm	1647 mm	1662 mm
	275/45 R 19 108 V XL[3)]	9 J x 19	60 mm	1641 mm	1656 mm
Collapsible spare wheel	195/75 18	6.5 J x 18	53 mm		

Cayenne S	Tyres	Wheel front/rear	Rim offset front/rear	Track front	 rear
Summer tyres	255/55 R 18 109 Y XL[2)]	8 J x 18	57 mm	1647 mm	1662 mm
	275/45 R 19 108 Y XL	9 J x 19	60 mm	1641 mm	1656 mm
	275/40 R 20 106 Y XL	9 J x 20	60 mm	1641 mm	1656 mm
	275/40 R 20 106 Y XL	9 J x 20/10 J x 20	60 mm/55 mm	1641 mm	1666 mm
	295/35 R 21 107 Y XL	10 J x 21	50 mm	1661 mm	1676 mm
	295/35 R 21 107 Y XL	10 J x 21	50 mm/45 mm	1661 mm	1686 mm
Winter tyres	255/55 R 18 109 V XL[2)]	8 J x 18	57 mm	1647 mm	1662 mm
	255/50 R 19 107 V XL[3)]	9 J x 19	60 mm	1641 mm	1656 mm
All-Season	255/55 R 18 109 V XL[2)]	8 J x 18	57 mm	1647 mm	1662 mm
	275/45 R 19 108 V XL[3)]	9 J x 19	60 mm	1641 mm	1656 mm
Collapsible spare wheel	195/75 18	6.5 J x 18	53 mm		
Cayenne and Cayenne S	The load capacity coefficient (e.g. “106”) and code letter (e.g. “T”) for permitted top speed are minimum requirements. When fitting new tyres or changing tyres: Please observe the chapter “TYRES AND WHEELS” on Page 292.				
Tyre and rim sizes	Approval for tyre and rim sizes is granted on the basis of extensive testing. Your Porsche partner will be pleased to advise you about the current approval status. By fitting tyres which have been approved by Porsche, you can be sure that you have the best possible tyres for your Porsche. The 20 inch and 21 inch tyre sizes are designed for on-road use.				
[1)2)3)] Snow chains and clearance	Clearance for tyres marked with [1)] only when snow chains, part No. 955.044.600.07, are fitted. Clearance for tyres marked with [2),3)] only when snow chains, part No. 955.044.600.08, are fitted. Tyres marked with [3)]: fit snow chains on rear axle only Optimal handling characteristics can be achieved only when snow chains are fitted on all four wheels of the vehicle. It is also possible to fit snow chains on only one axle (preferably the rear axle). Maximum speed 50 km/h (30 mph). Use only Porsche-approved fine-link cross-type or edge chains. Please observe the chapter “SNOW CHAINS” on Page 295.				

Tyre pressures, cold

These tyre inflation pressures only apply to the makes and types of tyres approved by Porsche.
Please observe the chapter “TYRES AND WHEELS” on Page 292.

Partially loaded (up to 3 people and 21 kg of luggage)	**Cayenne**		**Cayenne S**	
Summer tyres	Front axle	Rear axle	Front axle	Rear axle
235/65 R 17 summer tyres	2.6 bar (38 psi)	2.9 bar (43 psi)	2.6 bar (38 psi)	2.9 bar (43 psi)
255/55 R 18 summer tyres				
275/45 R 19 summer tyres				
275/40 R 20 summer tyres				
295/35 R 21 summer tyres				
All-Season, All-Terrain and winter tyres	Front axle	Rear axle	Front axle	Rear axle
235/65 R 17 M+S	2.4 bar (35 psi)	2.7 bar (39 psi)	2.4 bar (35 psi)	2.7 bar (39 psi)
255/55 R 18 M+S				
255/50 R 19 M+S				
275/45 R 19 M+S				
Collapsible spare wheel	Front axle	Rear axle	Front axle	Rear axle
195/75 - 18 collapsible wheel	3.5 bar (51 psi)	3.5 bar (51 psi)	3.5 bar (51 psi)	3.5 bar (51 psi)

Fully loaded (more than 3 people and 21 kg luggage)	**Cayenne**		**Cayenne S**	
	Front axle	Rear axle	Front axle	Rear axle
235/65 R 17 summer tyres and M+S	2.7 bar (39 psi)	3.4 bar (50 psi)	2.7 bar (39 psi)	3.4 bar (50 psi)
255/55 R 18 summer tyres and M+S				
255/50 R 19 M+S				
275/45 R 19 summer tyres and M+S				
275/40 R 20 summer tyres				
295/35 R 21 summer tyres				
195/75 - 18 collapsible wheel	3.5 bar (51 psi)	3.5 bar (51 psi)	3.5 bar (51 psi)	3.5 bar (51 psi)

▷ On vehicles with Tyre Pressure Monitoring, the vehicle load must be set on the multi-purpose display of the instrument panel. Please observe the chapter “SETTING VEHICLE LOADING AND ADJUSTING TYRE PRESSURE” on Page 138.

Weights

	Cayenne manual transmission	Cayenne Tiptronic S	Cayenne S manual transmission	Cayenne S Tiptronic S
Kerb weight				
Kerb weight (depending on equipment)				
per DIN 70020	2160 - 2520 kg	2170 - 2530 kg	2225 - 2600 kg	2245 - 2620 kg
as per 70/156/EEC [1]	2235 - 2595 kg	2245 - 2605 kg	2300 - 2675 kg	2320 - 2695 kg
Maximum axle load, front [2]	1385 kg	1385 kg	1455 kg	1455 kg
Maximum axle load, rear [2]	1650 kg	1650 kg	1680 kg	1680 kg
Maximum gross weight [2]	2945 kg	2945 kg	3080 kg	3080 kg
Trailer operation EU				
Maximum gross weight	3045 kg	3045 kg	3180 kg	3180 kg
Maximum axle load, front/rear axle	1385/1750 kg	1385/1750 kg	1455/1775 kg	1455/1775 kg
Roof load				
Maximum roof load [3] on vehicles with roof rail	100 kg 75 kg	100 kg 75 kg	100 kg 75 kg	100 kg 75 kg
Towed weight/vehicle + trailer weight				
Maximum towed weight, braked (up to max. 12 % gradient)	3500 kg	3500 kg	3500 kg	3500 kg
Maximum towed weight, unbraked	750 kg	750 kg	750 kg	750 kg
Maximum vehicle + trailer weight	6445 kg	6445 kg	6580 kg	6580 kg
Maximum drawbar load	140 kg	140 kg	140 kg	140 kg

[1] Kerb weight includes 75 kg driver and baggage share.

[2] The maximum gross weight and maximum axle loads must not be exceeded.
Note: If additional accessories are installed, the maximum load will be correspondingly less.

[3] Only use Roof Transport Systems from the Porsche Tequipment product range for your car or Roof Transport Systems which have been tested and approved by Porsche.

Ground clearance

	Cayenne	Cayenne S
Steel suspension		
Ramp angle	20.4°	20.4°
Overhang angle, front	28.6°	28.6°
Overhang angle, rear	22.8°	22.8°
Ground clearance (centre of axles)	218 mm	218 mm
Air suspension – normal level		
Ramp angle	20.0°	20.0°
Overhang angle, front	28.5°	28.5°
Overhang angle, rear	22.3°	22.3°
Ground clearance (centre of axles)	215 mm	215 mm
Air suspension – low level		
Ramp angle	17.6°	17.6°
Overhang angle, front	27.3°	27.3°
Overhang angle, rear	20.6°	20.6°
Ground clearance (centre of axles)	191 mm	191 mm
Air suspension – loading level		
Ramp angle	14.8°	14.8°
Overhang angle, front	21°	21°
Overhang angle, rear	18.5°	18.5°
Ground clearance (centre of axles)	161 mm	161 mm
Air suspension – off-road level		
Ramp angle	22.1°	22.1°
Overhang angle, front	30.2°	30.2°
Overhang angle, rear	23.6°	23.6°
Ground clearance (centre of axles)	241 mm	241 mm

	Cayenne	Cayenne S
Air suspension – special terrain level		
Ramp angle	24.7°	24.7°
Overhang angle, front	31.8°	31.8°
Overhang angle, rear	25.4°	25.4°
Ground clearance (centre of axles)	271 mm	271 mm

Capacities

Use only fluids and fuels authorised by Porsche. Your Porsche partner will be pleased to advise you.

	Cayenne	Cayenne S
Engine oil change quantity without oil filter	approx. 6.0 litres	approx. 8.0 litre
Engine oil change quantity with oil filter	approx. 6.9 litres Reference indication is the level on the oil dipstick. Please observe the chapter “CHECKING THE ENGINE OIL LEVEL” on Page 268.	approx. 8.5 litres
Coolant[1]	approx. 13 - 18 litres	approx. 18 - 21 litres
Manual transmission with compensation	approx. 1.8 litres	approx. 1.8 litres
Automatic transmission with torque converter	approx. 9.5 litres	approx. 9.0 litres
Transfer box	approx. 0.85 litre	approx. 0.85 litre
Front-axle differential	approx. 1.0 litre	approx. 1.0 litre
Rear-axle differential	approx. 1.25 litres	approx. 1.4 litres
Locking rear differential	approx. 1.6 litres	approx. 1.6 litres
Fuel tank	approx. 100 litres, including approx. 12 litres reserve	approx. 100 litres, including approx. 12 litres reserve
Fuel octane rating	The engine is designed to provide optimum performance and fuel consumption if unleaded premium fuel with 98 RON/88 MON is used. If unleaded premium fuels with octane numbers of at least 95 RON/85 MON are used, the engine’s knock control automatically adapts the ignition timing.	
Power steering	approx. 1.5 litres hydraulic fluid Pentosin CHF 202	approx. 1.5 litres hydraulic fluid Pentosin CHF 202
Brake fluid	approx. 0.95 litre Use only genuine Porsche brake fluid or brake fluid of the same quality.	approx. 0.95 litre
Window/ headlight washer system	approx. 7.5 litres	approx. 7.5 litres

[1] depending on vehicle equipment

Dimensions

	Cayenne	Cayenne S
Length	4798 mm	4798 mm
Length with external spare wheel	5029 mm	5029 mm
Width	1928 mm	1928 mm
Width with door mirrors	2200 mm	2200 mm
Height at DIN kerb weight – normal level	1699 mm	1699 mm
Height at DIN kerb weight (rail) – normal level	1741 mm	1741 mm
Height at DIN kerb weight (basic carrier of Roof Transport System) – normal level	1789 mm	1789 mm
Height at DIN kerb weight – special terrain level	1748 mm	1748 mm
Height at DIN kerb weight (rail) – special terrain level	1789 mm	1789 mm
Height at DIN kerb weight (basic carrier of Roof Transport System) – special terrain level	1837 mm	1837 mm
Height at DIN kerb weight with rear lid open	2218 mm	2218 mm
Max. wading depth	500 mm [1]	500 mm [1]

[1] Up to 555 mm for vehicles with air suspension at special terrain level.

	Cayenne	Cayenne S
Wheelbase	2855 mm	2855 mm
Overhang, front	936 mm	936 mm
Overhang, rear	1007 mm	1007 mm
Turning circle	11.7 m	11.7 m

Driving performance

The specifications refer to a vehicle with DIN kerb weight and max. 200 kg load without performance-reducing additional equipment (e.g. special tyres)

	Cayenne manual transmission	**Cayenne Tiptronic S**	**Cayenne S manual transmission**	**Cayenne S Tiptronic S**
Top speed	227 km/h (141 mph)	227 km/h (141 mph)	252 km/h (157 mph)	250 km/h (155 mph)
Acceleration 0 - 100 km/h (62 mph)	8.1 seconds	8.5 seconds	6.6 seconds	6.8 seconds
Maximum speed when towing a trailer	80 km/h (50 mph)			

Index

2-zone air conditioning
- Air-conditioning sensors 71
- Defrosting windscreen 70
- Operating overview 67
- REST mode 71
- Setting air distribution 69
- Setting air quantity 68
- Setting temperature 68
- Switching ECON mode on/off 70
- Switching Mono function on/off 69
- Switching on automatic circulating-air mode 69
- Switching on circulating-air mode 70
- Using engine residual heat 71

4-wheel drive
- Functional description 191
- Warning message 157

4-zone air conditioning
- Air-conditioning sensors 78
- Controlling rear air-conditioned areas with the front control panel 79
- Defrosting windscreen 77
- Disabling control panel for rear air-conditioned areas 79
- Disabling rear control panel 79
- Operating overview, front 74
- Operating overview, rear 75
- REST mode 78
- Setting air distribution 77
- Setting air quantity 76
- Setting temperature 76
- Switching ECON mode on/off 78
- Switching Mono function on/off 77
- Switching on automatic circulating-air mode 77
- Switching on circulating-air mode 78
- Using engine residual heat 78

A

ABD (automatic brake differential)
- Functional description 192

ABS (anti-lock brake system)
- Functional description 198
- Off-road ABS functional description 199
- Warning light on the tachometer 198
- Warning message 156

Additional door mirrors when towing a trailer 244

Additional high beam
- Installing headlights 341
- Removing headlights 339

After driving off-road 209

Air cleaner maintenance instructions 275

Air conditioner
- Child lock 79
- Operating overview 67
- Operating overview of 4-zone air conditioning, front 74
- Operating overview of 4-zone air conditioning, rear 75
- Operating overview of manually controlled air-conditioning system 62
- Switching child protection on/off 79
- Which system is in my car? 59

Air pressure
- Data (bar/psi) 367
- Plate 362
- Warning message 153

Air suspension
- Compressor connection 315
- Lowering the vehicle 204
- Lowering the vehicle for loading 204
- Overview 202
- Raising the vehicle 203
- Warning message on the multi-purpose display 205

Air vents
- Opening/closing 80

Airbag
- Airbag warning light on the tachometer 218
- Care instructions 288
- Disposal 218
- Functional description 217
- Installation location 217
- Passenger airbag warning light 45
- Switching passenger airbag on and off 44
- Unit 52

Air-conditioning sensors
- For 2-zone air conditioning 71
- For 4-zone air conditioning 78

Alarm system
- Avoiding false alarms 264
- Switching off 263
- Switching off alarm 263
- Switching off passenger compartment monitoring system and inclination sensor 263
- Switching on 263

Alcantara care instructions 288

All-Season tyres Overview 365

All-Terrain tyres Overview 365

All-wheel drive
- Functional description 191
- Warning message 157

Aluminium rims
- Care instructions 286
- Inscription 297

Antifreeze
- In coolant 271
- In washer fluid 274

Anti-lock brake system (ABS)
- Functional description 198
- Off-road ABS functional description 199
- Warning light on the tachometer 198
- Warning message 156

Armrest 236

Ashtray 240

Assembly aid for wheel changes 308

Assistance when driving downhill
(Engine Braking Support) 201
auto (light switch)
Functional description, driving light assistant 106
Switching on driving light assistant 105
AUTO button
2-zone air conditioning 68
4-zone air conditioning 75
Automatic (Tiptronic S)
Functional description 176
Rocker switches on the steering wheel 52
Selector lever 177
Transmission ratios 364
Automatic anti-dazzle function for interior mirror 51
Automatic brake differential (ABD)
Functional description 192
Automatic headlight beam adjustment
Functional description 107
Automatic rear lid 19
Automatically closing the rear lid 21

B

Baby seat
Installing with ISOFIX system 46
ISOFIX restraint system 46
Prescribed installation direction
(depending on age of child) 42
Recommended child seats 43
Ball hitch (trailer coupling)
Inserting (mechanical hitch) 247
Removing (mechanical hitch) 250
Retracting (electrical hitch) 251
Storage location (mechanical hitch) 245
Ball hitch (trailer hitch)
Extending (electrical hitch) 251
Battery
Care 333
Changing in the parking heater remote control 335
Changing in vehicle key 335
Charging 337
General information 332
Jump lead starting 336
Procedure after battery connection 334
Removing and installing 332
Replacing 334
Vehicle electrical system voltage indication 124
Voltage indication 124
Warning message 155
Winter driving 333
Before driving off 163
Belts
Adjusting belt height 41
Belt tensioner functional description 39
Care instructions 288
Fastening 40
Opening 40
Warning light on the tachometer 39
Bi-Xenon
Installing headlights 341
Removing headlights 339
Brake booster faulty warning message 156
Brake fluid
Change quantity 372
Changing 274
Checking level 273
Warning light on speedometer 274
Warning message 156
Brake light
Changing bulb 351
Installing tail light 350
Removing tail light 349
Brake pads
Warning message on the multi-purpose display 156
Warning message, brakes 170
Brakes
Applying/releasing parking brake 169
Bedding in new pads 163
Brake pad warning message 170
Footbrake 169
Test stand 201
Warning message on the multi-purpose display
Brake pads 156
Brief overview
2-zone air conditioning 66
4-zone air conditioning (front control panel) 72
4-zone air conditioning (rear control panel) 73
Door mirrors 48
Manually controlled air-conditioning system 61
Opening and locking from outside 14
Sliding/lifting roof 92
Windscreen wipers 113
Bulbs
Changing bulb for dipped beam, halogen 342, 344
Changing bulb for high beam, halogen 343, 345
Changing bulb for number plate light 352
Changing bulb for side light, halogen 347
Overview 355
Replacing brake light 351
Replacing direction indicator 351
Replacing rear direction indicator 351
Replacing rear fog light 351
Replacing reversing light 351
Replacing tail light 351

C

Capacities
Brake fluid 372
Coolant 372
Engine oil 372
Fuel 372
Overview 372
Washer fluid 372
Car care
Airbags 288
Alcantara 288
Cleaning the engine compartment 284
Fabric linings 288
Headlights, plastic parts, adhesive films 286
Laying up your Porsche 288
Leather 287
Light alloy wheels 286
Paint 284
Seals 287
Seat belts 288
Undersealing 285
Use of high-pressure cleaning units 282
Washing 283
Wheel bolts 300
Windows 285
Care instructions
Airbags 288
Alcantara 288
Carpet 287
Cleaning the engine compartment 284
Fabric linings 288
Floor mats 287

Headlights, plastic parts, adhesive films 286
Laying up your Porsche 288
Leather..... 287
Light alloy wheels 286
Paint 284
Seals 287
Seat belts 288
Undersealing 285
Use of high-pressure cleaning units..... 282
Washing..... 283
Wheel bolts 300
Windows 285
Cargo management system
Inserting and adjusting the strap reel 224
Inserting and adjusting the telescopic bar 224
Inserting and adjusting tie-down rings..... 226
Overview..... 224
Carpet (care instructions)..... 287
Carpet Care instructions 287
Central locking system 30
Changing settings via multi-purpose display..... 145
Centre armrest 236
Centre differential lock
Engaging 186
Changing bulb for number plate light..... 352
Check engine
Functional description 125
Warning light on the tachometer..... 125
Checking hydraulic fluid (power steering) 275
Child seat
Installing with ISOFIX system..... 46
ISOFIX restraint system 46
Prescribed installation direction
(depending on age of child) 42
Recommended child seats 43
Cigarette lighter 241
Cleaning the engine compartment 284
Clock
Button for setting 120
Setting on the multi-purpose display..... 148
Closing
Automatically closing the rear lid 21
Closing sliding/lifting roof 93
Locking vehicle door from inside 24
Panorama roof system 99
Rear lid..... 19
Rear window..... 23
Spare wheel bracket 319
Vehicle door with vehicle key (remote control)..... 17
Cockpit
Adjusting illumination..... 107
Clock 120
Cooling system temperature gauge 121
Fuel level indicator 122
Odometer 123
Oil temperature gauge..... 120
Speedometer..... 123
Tachometer..... 120
Voltage indication 124
Warning and indicator lights, overview..... 118
Collapsible spare wheel General information..... 317
Collapsible spare wheel in the luggage compartment 311
Coming Home function
Setting lighting off delay 147
Switching on..... 111
Compass
Setting on the multi-purpose display..... 149
Compressor
Connection (on vehicles without air suspension) 315
Storage location
(on vehicles without level control) 299
Control systems
Overview (PTM, PTM Plus, PSM, PASM, PDCC)..... 190
Coolant
Antifreeze 271
Checking level..... 271
Coolant change quantity 372
Cooling system
Temperature gauge 121
Warning 121
Cornering light
Installing headlights..... 341
Removing headlights 339
Crossing obstacles 215
Cruise control
Accelerating 173
Decelerating 173
Functional description..... 172
Interrupting operation..... 173
Storing speed 172
Switching off..... 174
Switching on..... 172
Cupholder
front..... 238
rear..... 239

D

Data bank for vehicle data..... 361
Defrosting windscreen
With 2-zone air conditioning 70
With 4-zone air conditioning 77
With manual air conditioning 64
Dimensions..... 373
Dimming comfort lighting 111
Dimming footwell light 111
Dimming the comfort lighting..... 111
Dipped beam
Changing bulb, halogen 342
Installing headlights..... 341
Removing headlights 339
Switching on/off 105
Direction indicator stalk 108
Direction indicator, front
Installing headlights..... 341
Removing headlights 339
Direction indicator, rear
Changing bulb 351
Installing tail light 350
Removing tail light 349
Disabling control panel for rear air-conditioned areas 79
Distance displays, ParkAssist..... 256
Door
De-icing door lock..... 282
Locking..... 17
Locking with Porsche Entry & Drive (keyless)..... 17
Locking with the vehicle key (remote control)..... 17
Unlocking with Porsche Entry & Drive (keyless) 16
Unlocking with the vehicle key (remote control) 16
Door mirrors
Activating synchronous adjustment 145
Additional door mirrors when towing a trailer 244
Adjusting..... 49
Adjusting as parking aid..... 50
Adjusting synchronously..... 49
Brief overview 48
Driving with a trailer 244
Folding in 49

Storing setting as parking aid....34
Switching heating on/off....50
Unfolding....49
Driving performance Technical data....374
Driving programmes for on-road and off-road driving....184
Driving with a trailer....244
DVD
Installation location....239
Navigation....239
Player....239

E

Easy Entry function
Functional description....35
Switching on/off....35
Emergency unlocking
of sliding/lifting roof....95
Of the filler flap....281
Of the ignition key in the ignition lock....167
Of the Panorama roof system....102
of the selector lever for Tiptronic S....182
Of the spare wheel bracket....320
Emergency-call button....112
Emission control
Functional description....125
Warning light on the tachometer....125
Engaging the rear differential lock....187
Engine
Cooling system....121
Data....363
Starting (manual transmission)....167
Stopping....168
Engine Braking Support
(assistance when driving downhill)....201
Engine drag torque control (MSR)
Functional description....194
Engine oil
Change quantity....372
Checking oil level with dipstick....268
Engine Oil Pressure....155
General information....269
Oil-level warning on the multi-purpose display....268
Temperature gauge....120
Topping up....270
Entry & Drive
Locking vehicle door with
Porsche Entry & Drive....17
Opening/closing Panorama roof system
with vehicle key....100
Passenger compartment monitoring
with Porsche Entry & Drive....264
Unlocking vehicle door with
Porsche Entry & Drive....16
Entry aid
Functional description....35
Switching on/off....35
Exit aid
Functional description....35
Switching on/off....35

F

Fabric linings (care instructions)....288
Factory settings
Resetting multi-purpose display....150
Filler flap
Emergency unlocking....281
Filling pressure
Plate location....362
Tyres (bar/psi)....367
Warning light on speedometer....143
Warning message....153
Filter
Air cleaner maintenance instructions....275
Particle filter maintenance instructions....275
Fire extinguisher....161
First aid kit, storage location....291
Floor mats, care instructions....287
Fluids and fuels
Brake fluid....372
Coolant....372
Engine oil....372
Fuel....372
Overview....372
Washer fluid....372
Folding wedges to prevent rolling....301
Footbrake....169
Four-wheel drive
Functional description....191
Warning message....157
Four-zone air conditioning
Air-conditioning sensors....78
Controlling rear air-conditioned areas
with the front control panel....79
Defrosting windscreen....77
Disabling control panel for rear
air-conditioned areas....79
Disabling rear control panel....79
Operating overview, front....74
Operating overview, rear....75
REST mode....78
Setting air distribution....77
Setting air quantity....76
Setting temperature....76
Switching ECON mode on/off....78
Switching Mono function on/off....77
Switching on automatic circulating-air mode....77
Switching on circulating-air mode....78
Using engine residual heat....78
Front seat
Adjusting....32
Drawer under the right front seat....237
Passenger mirror as parking aid....34
Recalling settings (memory)....33
Storing driver's seat settings (memory)....34
Storing passenger's seat settings (memory)....34
Front seats with memory....34
Front windscreen wipers
Adjusting the rain sensor sensitivity....115
Switching on rain sensor....114
Windscreen wiping plus washer system....116
Windscreen, fast wiping....115
Windscreen, slow wiping....115
Wiping windscreen once (one-touch function)....115
Fuel
Consumption....364
Fuel level indicator....122
Fuel reserve warning....122
Octane rating....280
Quality....280
Refuelling....280
Tank capacity....372

Fuel can ... 279
Fuel level indicator ... 122
Fuel reserve ... 281
Function keys on steering wheel ... 54
Fuse assignment ... 324

G

Garage door opener
- Applying ... 261
- Deleting programmed signals ... 259
- Functional description ... 259
- Programming signal (changeable code system) ... 260
- Programming signal (fixed code system) ... 260

Gear display for Tiptronic S ... 177
Glasses case in the roof console ... 234
Glove compartment
- Cooling ... 235
- Locking ... 235
- Opening ... 235
- Switching off cooling ... 235

Ground clearance Technical data ... 370

H

Halogen
- Changing bulb for dipped beam ... 342, 344
- Changing bulb for high beam ... 343, 345
- Changing bulb for side light ... 347
- Installing headlights ... 341
- Removing headlights ... 339

Hands-free microphone ... 160
Headlight beam adjustment (automatic)
- Checking operation ... 107
- Functional description ... 107

Headlight beam adjustment (manual) ... 107
- Functional description ... 107

Headlights
- Adjusting ... 353
- Care instructions ... 286
- Changing bulb for dipped beam, halogen ... 342, 344
- Changing bulb for high beam, halogen ... 343, 345
- Changing bulb for side light, halogen ... 347
- Changing to left-hand traffic ... 353
- Installing ... 341
- Operating washer system ... 116
- Removing ... 339

Headrests
- Adjusting ... 36
- Removing and installing ... 36

Heated rear window
- Switching off ... 81
- Switching on ... 81

Height adjustment
- Lowering the vehicle ... 204
- Overview ... 202
- Raising the vehicle ... 203
- Warning message on the multi-purpose display ... 205

High beam ... 108
- Changing bulb, halogen ... 343, 345
- Installing headlights ... 341
- Removing headlights ... 339
- Stalk ... 108

High-pressure cleaning units, information on use ... 282
Hillholder (moving-off assistant for Tiptronic S) ... 199
Horn ... 52

I

Identification number location ... 361
Identification plate ... 362
Ignition lock
- Emergency operation of key ... 167
- Functional description ... 164

Illumination
- Of steering wheel keys, switching on/off ... 55
- Switching on when entering the vehicle ... 112
- Switching on when leaving the vehicle ... 111

Immobiliser ... 265
Inclination sensor
- Function indication ... 264
- Switching off with button in door handle (Porsche Entry & Drive) ... 264
- Switching off with vehicle key ... 263

Inserting and adjusting tie-down rings ... 226
Instrument cluster
- Adjusting illumination ... 107
- Clock ... 120
- Cooling system temperature gauge ... 121
- Fuel level indicator ... 122
- Odometer ... 123
- Oil temperature gauge ... 120
- Speedometer ... 123
- Tachometer ... 120
- Voltage indication ... 124
- Warning and indicator lights, overview ... 118

Instrument panel
- Adjusting illumination ... 107
- Clock ... 120
- Cooling system temperature gauge ... 121
- Fuel level indicator ... 122
- Odometer ... 123
- Oil temperature gauge ... 120
- Speedometer ... 123
- Tachometer ... 120
- Voltage indication ... 124
- Warning and indicator lights, overview ... 118

Intelligent Maintenance Computer for the Cayenne (V6) ... 122
Interior light
- Switching on/off ... 109
- Switching on/off automatically ... 109

Interior mirror
- Automatic anti-dazzle function ... 51

ISOFIX system
- Installing ... 46
- Installing a child seat ... 46
- Prescribed installation direction of child seat (depending on age of child) ... 42
- Recommended child seats ... 43

J

Jack
- Jacking points on the vehicle ... 306
- Storage location in luggage compartment ... 298

Jump lead starting with exhausted battery ... 336
Jump lead starting, external power supply ... 336

K

Key
- Changing battery ... 335
- Emergency operation, ignition lock ... 167
- Folding in the key bit ... 29
- Folding out the key bit ... 29
- Locking the vehicle door ... 17
- Opening/closing Panorama roof system ... 100
- Opening/closing sliding/lifting roof ... 94
- Unlocking the vehicle door ... 16

Key (remote control) ... 29
Key bit
- Folding in ... 29
- Folding out ... 29

L

Language
- Setting on the multi-purpose display ... 150

Large roof
- Emergency unlocking ... 102
- Functional description ... 98
- Opening/closing ... 99
- Opening/closing roller blind ... 101
- Opening/closing with vehicle key ... 100

Leather care instructions ... 287
Left-hand traffic (changing headlights) ... 353
Level control
- Displaying status on the multi-purpose display ... 134
- Lowering the vehicle ... 204
- Lowering the vehicle for loading ... 204
- Overview ... 202
- Raising the vehicle ... 203
- Warning message on the multi-purpose display ... 205

Light
- Headlight flasher ... 108
- Switching on Coming Home function ... 111
- Switching on lighting off delay when leaving the vehicle ... 111
- Switching on when entering the vehicle ... 112

Light alloy wheels
- Care instructions ... 286
- Inscription ... 297

Light switch
- Functional description, auto function ... 106
- Overview ... 105
- Switching on auto position ... 105

Lights
- Care instructions ... 286
- Dimming comfort lighting ... 111
- Dimming footwell light ... 111
- Switching front reading lights on/off ... 109
- Switching front reading lights on/off automatically ... 109
- Switching interior light on/off ... 109
- Switching interior light on/off automatically ... 109
- Switching rear reading lights on/off ... 110
- Switching rear reading lights on/off automatically ... 110

Load
- General information ... 227
- Installing luggage compartment cover ... 229
- Luggage compartment cover, pulling out/retracting ... 228
- Luggage safety net, permitted uses ... 229
- Position of tie-down rings ... 223
- Removing luggage compartment cover ... 228
- Ski bag ... 231

Loading
- General information ... 227
- Installing luggage compartment cover ... 229
- Lowering the vehicle for loading ... 204
- Luggage compartment cover, pulling out/retracting ... 228
- Luggage safety net, permitted uses ... 229
- Position of tie-down rings ... 223
- Removing luggage compartment cover ... 228
- Ski bag ... 231

Loadspace
- Cargo management system ... 224
- Opening floor ... 223
- Overview ... 223

Lock
- Changing fuses ... 322
- Child lock ... 79
- Disabling rear control panel of air-conditioning system ... 79

Locks
- Displaying status on the multi-purpose display ... 134

Low Range (reduction)
- Displaying status on the multi-purpose display ... 134
- Indicator light ... 185
- Switching off ... 188
- Switching on ... 185

Luggage
- General information ... 227
- Luggage compartment cover, pulling out/retracting ... 228
- Luggage safety net, permitted uses ... 229
- Position of tie-down rings ... 223
- Safety net ... 230
- Ski bag ... 231

Luggage compartment
- Closing luggage compartment lid ... 19
- Closing the luggage compartment window ... 23
- Opening floor ... 223
- Opening luggage compartment lid ... 18
- Opening luggage compartment window ... 23
- Overview ... 223

Luggage compartment cover
- Installing ... 229
- Pulling out ... 228
- Removing ... 228
- Retracting ... 228

Luggage safety net
- Permitted uses ... 229
- Removing from rear seat backrest ... 230
- Securing passenger compartment ... 230

M

Maintenance computer for the Cayenne (V6) ... 122
Make-up mirror ... 57
Manual air conditioning
- Defrosting windscreen ... 64
- REST mode ... 65
- Setting air distribution ... 63
- Setting air quantity ... 63
- Setting temperature ... 63
- Switching ECON mode on/off ... 64
- Switching on circulating-air mode ... 64
- Using engine residual heat ... 65

Manual headlight beam adjustment
- Functional description ... 107
- Settings ... 107

Manual transmission
- Shift pattern ... 175
- Transmission ratios ... 364

Manually controlled air-conditioning system
- Operating overview ... 62

Maximum permitted engine speeds ... 175
Memory ... 34
- Recalling seat settings ... 33
- Storing driver's seat settings ... 34
- Storing passenger's seat settings ... 34

Minor repairs
- In the event of a flat tyre ... 301
- Jack in the luggage compartment ... 298
- Securing the vehicle against rolling ... 301
- Storage location of first aid kit ... 291
- Storage location of warning triangles ... 290
- Tool kit in the luggage compartment ... 298
- Towing the vehicle ... 357
- Tow-starting the vehicle ... 356

Mirrors
- Activating synchronous adjustment of door mirrors ... 145
- Additional door mirrors when towing a trailer ... 244
- Adjusting door mirrors ... 49
- Adjusting door mirrors as parking aid ... 50
- Adjusting the door mirrors synchronously ... 49
- Automatic anti-dazzle function for interior mirror ... 51
- Folding in door mirrors ... 49
- Switching door mirror heating on/off ... 50
- Unfolding door mirrors ... 49

Mobile phones and 2-way radios ... 160
Motion sensor (passenger compartment monitoring)
- Switching off with button in door handle (Porsche Entry & Drive) ... 264
- Switching off with vehicle key ... 263

Moving-off assistant
- for Tiptronic S (hillholder) ... 199
- On vehicles with manual transmission ... 200

Multi-functional steering wheel
- Functional description ... 54
- Operating the function keys ... 54
- With telephone function ... 55
- Without telephone function ... 56

Multi-purpose display
- Activating synchronous mirror adjustment ... 145
- Changing settings of central locking system ... 145
- Displaying status of level control ... 134
- Displaying status of locks/reduction ... 134
- Gear display for Tiptronic S ... 177
- Overview of warning messages ... 151
- Resetting to factory settings ... 150
- Setting a speed limit ... 132
- Setting compass ... 149
- Setting language for displays ... 150
- Setting lighting off delay ... 147
- Setting the clock ... 148
- Setting Tyre Pressure Monitoring ... 135
- Setting tyre sealant/sealing set ... 142
- Setting units of displays ... 150

O

Octane rating, petrol ... 280
Odometer
- Display ... 123
- Resetting ... 123

Off delay
- Setting ... 147
- Switching on ... 111

Off-road
- Crossing obstacles ... 215
- Driving downhill ... 212
- Rules for off-road driving ... 208
- Sand ... 215
- Track ruts ... 216
- Uphill driving ... 211
- Water crossing ... 213

Off-road ABS functional description ... 199
Off-road driving
- Crossing obstacles ... 215
- Driving downhill ... 212
- Engaging the centre differential lock ... 186
- Engaging the rear differential lock ... 187
- Low Range (reduction) indicator light ... 185
- Low Range indicator light ... 185
- Rules for driving ... 208
- Sand ... 215
- Switching off Low Range (reduction) ... 188
- Switching on Low Range (reduction) ... 185
- Track ruts ... 216
- Uphill driving ... 211
- Water crossing ... 213

Off-road PSM functional description ... 194
Oil
- Change quantity ... 372
- Checking oil level with dipstick ... 268
- Consumption ... 363
- Engine oil pressure ... 155
- Filler opening ... 270
- General information ... 269
- Oil-level warning on the multi-purpose display ... 268
- Temperature gauge ... 120
- Topping up ... 270

On-board computer
Activating synchronous mirror adjustment 145
Changing settings of central locking system 145
Displaying status of level control..... 134
Displaying status of locks/reduction 134
Gear display for Tiptronic S 177
Overview of warning messages 151
Resetting to factory settings 150
Setting a speed limit..... 132
Setting compass..... 149
Setting language for displays 150
Setting lighting off delay..... 147
Setting the clock..... 148
Setting Tyre Pressure Monitoring 135
Setting tyre sealant/sealing set 142
Setting units of displays 150
Opening and closing
Automatically closing the rear lid 21
Closing spare wheel bracket 319
Closing the rear window 23
Engine compartment lid 26
Loadspace floor 223
Locking vehicle door with
Porsche Entry & Drive..... 17
Locking vehicle door with the vehicle key
(remote control)..... 17
Opening and closing rear lid automatically 19
Opening and locking vehicle door from inside..... 24
Opening spare wheel bracket 318
Opening the rear lid automatically 20
Panorama roof system..... 98
Roller blind of the Panorama roof system 101
Sliding/lifting roof 93
Unlocking and opening rear window..... 23
Unlocking vehicle door with
Porsche Entry & Drive..... 16
Unlocking vehicle door with the vehicle key
(remote control)..... 16
Opening and closing the engine compartment lid 26
Opening the rear lid automatically 20

P

Paint
Care instructions..... 284
Polishing 284
Preserving 284
Removing spots and stains 284
Repairing damage 284
Panorama roof system
Emergency unlocking..... 102
Functional description 98
Opening/closing 99
Opening/closing roller blind 101
Opening/closing with vehicle key 100
ParkAssist
Distance display, front 256
Distance display, rear 256
Functional description 254
Switching on/off 254
When driving with a trailer..... 257
Parking aid
Distance display, front 256
Distance display, rear 256
Functional description 254
Storing door mirror setting as parking aid 34
Switching on/off 254
Swivelling down mirror glass 50
When driving with a trailer..... 257
Parking brake
Applying 169
Releasing 169
Warning message 156
Parking heater 82
Activating a memory location 85
Changing the remote control battery 335
Faults..... 86
Programming 84
Remote control..... 83
Switching on/off 83
Particle filter maintenance instructions 275
PASM (Porsche Active Suspension Management)
Functional description 206
Overview 190
Selecting the running-gear setup 206
Passenger airbag
Switching on and off 44
Warning light in the centre console 45
PASSENGER AIRBAG OFF
Warning light in the centre console 45
Passenger compartment monitoring system 264
Switching off with button in door handle
(Porsche Entry & Drive) 264
Switching off with vehicle key 263
Passenger mirror
Activating synchronous mirror adjustment 145
Additional door mirrors when towing a trailer..... 244
Adjusting 49
Adjusting as parking aid 50
Adjusting synchronously 49
Driving with a trailer..... 244
Folding in..... 49
Storing setting as parking aid..... 34
Switching heating on/off..... 50
Unfolding 49
PCM (Porsche Communication Management)..... 160
Performance test on roller test stands 201
Petrol
Consumption..... 364
Fuel can 279
Fuel level indicator..... 122
Fuel reserve warning..... 122
Octane rating 280
Quality..... 280
Refuelling..... 280
Tank capacity..... 372
Porsche Active Suspension Management (PASM)
Functional description 206
Overview 190
Selecting the running-gear setup 206
Porsche Communication Management (PCM)..... 160
Porsche Drive-Off Assistant
Moving-off assistant on vehicles
with manual transmission..... 200
Porsche Dynamic Chassis Control (PDCC)
Functional description 207
Overview 190

Porsche Entry & Drive
Inclination sensor ... 264
Locking the vehicle ... 17
Opening/closing Panorama roof system with vehicle key ... 100
Passenger compartment monitoring system ... 264
Switching off readiness for operation ... 30
Unlocking the vehicle ... 16
Porsche Stability Management (PSM)
Functional description of off-road PSM ... 194
Multi-functional light in the tachometer ... 195
Overview ... 190
Switching off ... 194
Switching on ... 195
Warning message on the multi-purpose display ... 156
Porsche Traction Management (PTM)
Overview ... 190
Porsche Traction Management Plus (PTM Plus)
Overview ... 190
Power steering ... 275
Power windows
Adjusting after connecting battery ... 91
Closing windows with button in door handle (Porsche Entry & Drive) ... 90
Disabling in the rear doors ... 89
Opening/closing windows with rocker switch ... 88
Opening/closing windows with vehicle key (without Porsche Entry & Drive) ... 90
Overview of driver's door control panel ... 88
Overview of passenger's door control panel ... 88
Power-transmission and running-gear control systems
Overview (PTM, PTM Plus, PSM, PASM, PDCC) ... 190
PSM (Porsche Stability Management)
Functional description of off-road PSM ... 194
Multi-functional light in the tachometer ... 195
Overview ... 190
Switching off ... 194
Switching on ... 195
Warning light on instrument panel ... 334
Warning message on the multi-purpose display ... 156
PTM (Porsche Traction Management)
Overview ... 190
PTM Plus (Porsche Traction Management Plus)
Overview ... 190

R

Radiator fans ... 272
Radio ... 161
Rain sensor ... 115
Adjusting ... 115
Switching on ... 114
Reading lights, front
Switching on/off ... 109
Switching on/off automatically ... 109
Rear fog light
Changing bulb ... 351
Switching on ... 105
Rear lid
Automatic ... 19
Closing ... 19
Opening ... 18
Rear reading lights
Switching on/off ... 110
Switching on/off automatically ... 110
Rear seats
Adjusting to vertical position ... 222
Folding forward ... 220
Folding forward and returning to upright position ... 220
Rear shelf
Installing ... 229
Pulling out ... 228
Removing ... 228
Retracting ... 228
Rear window
Closing ... 23
Opening ... 23
Rear window wiper
Changing wiper blade ... 278
Switching on intermittent operation ... 116
Windscreen wiping plus washer system ... 116
Wiping rear window once (one-touch function) ... 116
Reduction (Low Range)
Displaying status on the multi-purpose display ... 134
Indicator light ... 185
Switching off ... 188
Switching on ... 185
Refuelling ... 281
Remote control
Changing battery ... 335
Locking the vehicle door ... 17
Opening/closing Panorama roof system ... 100
Opening/closing sliding/lifting roof ... 94
Parking heater ... 83
REST mode
With 2-zone air conditioning ... 71
With 4-zone air conditioning ... 78
With manual air conditioning ... 65
Reversing light
Changing bulb ... 351
Rim offset ... 365
Roller blind
Cleaning position ... 102
Opening/closing for Panorama roof system ... 101
Roof console ... 109
Roof Transport System ... 233
Running gear set-up
Functional description ... 206
Selecting ... 206
Running in
New brake pads ... 163
New tyres ... 163
Oil and fuel consumption ... 163
Running-gear control systems (level control)
Overview (PTM, PTM Plus, PSM, PASM, PDCC) ... 190

S

Safety button in the armrest ... 79
Safety net
Permitted uses ... 229
Removing from rear seat backrest ... 230
Securing passenger compartment ... 230
Screwdriver ... 298
Sealant/sealing set
For defective tyres ... 303
Setting on the multi-purpose display ... 142
Seals
Care instructions ... 287

Seat belts
Adjusting belt height 41
Belt tensioner functional description 39
Care instructions 288
Fastening 40
Opening 40
Warning light on the tachometer 39
Seat heating 37
Rear (4-zone air conditioning) 38
Rear (manual/2-zone air conditioning) 79
Rear (manually controlled air conditioning/
2-zone air conditioning) 37
Switching off 37
Switching on 37
Seats
Adjusting rear seats to vertical position 222
Adjusting the front seat 32
Folding forward at rear and returning
to upright position 220
Recalling settings (memory) 33
Storing driver's seat settings (memory) 34
Storing passenger mirror setting as
a parking aid (memory) 34
Storing passenger's seat settings (memory) 34
Securing points in the luggage compartment 223
Selector lever
Automatic 177
Tiptronic S 177
Selector lever (Tiptronic S)
Display on the multi-purpose display 177
Emergency unlocking 182
Sensors
Air-conditioning sensors for 2-zone air conditioning .. 71
Air-conditioning sensors for 4-zone air conditioning .. 78
Service indicator 155
Service indicator for the Cayenne (V6) 122
Setting air distribution
With 2-zone air conditioning 69
With 4-zone air conditioning 77
With manual air conditioning 63
Setting air quantity
With 2-zone air conditioning 68
With 4-zone air conditioning 76
With manual air conditioning 63
Setting temperature
With 2-zone air conditioning 68
With 4-zone air conditioning 76
With manual air conditioning 63
Setting units on the multi-purpose display 150
Settings 107
Side lights 105
Changing bulb, halogen 347
Installing headlights 341
Removing headlights 339
Sill covers 307
Ski bag
Loading 231
Securing 232
Stowing 232
Sliding/lifting roof
Brief overview 92
Emergency unlocking 95
Functional description 93
Opening/closing with vehicle key 94
Snow chains
General information 295
Overview 366
Socket (12 V) 321
Socket for trailer
Hitch, electrical 252
Mechanical hitch 249
Spacers
Fitting 310
General information 299
Removing 309
Spare wheel
Fitting on spare wheel bracket 317
General information 317
Removing from spare wheel bracket 317
Spare wheel / collapsible spare wheel
in the luggage compartment 311
Spare wheel bracket
Closing 319
Opening 318
Spare wheel in the luggage compartment 311
Speed code letter on tyre 297
Speed limit
Setting on the multi-purpose display 132
Speedometer, digital 123
Sport button 188
Sport mode 188
SportDesign package
(information on risk of damage) 209
Sports exhaust system
Switching on/off 188
Stainless steel exhaust tailpipes 286
Starting
Engine (manual transmission) 167
Starting with manual transmission 167
Steam-jet cleaners Information on use 282
Steering column
Locking with Porsche Entry & Drive 166
Locking without Porsche Entry & Drive 166
Steering column lock
With Porsche Entry & Drive 265
Without Porsche Entry & Drive 265
Steering wheel
Adjustment 53
Heating 52
Multi-functional steering wheel
with telephone function 55
Multi-functional steering wheel
without telephone function 56
Multi-functional steering wheel,
functional description 54
Operating the function keys 54
Steering lock 164
Switching key illumination on/off 55
Storage 234
Drawer under the right front seat 237
Glasses case in the roof console 234
Glove compartment 235
Storage compartment at the side
of the luggage compartment 237
Storage compartment in the front armrest 236
Storage compartment in the rear armrest 236
Storage compartment
At the sides of the luggage compartment 237
Drawer under the right front seat 237
Glasses case in the roof console 234
Glove compartment 235
In the front armrest 236
In the rear armrest 236
Storage 234

Strap reel
Inserting and adjusting ... 224
Strap reel storage location ... 224
Summer tyres
Changing tyres ... 308
Overview ... 365
Storage ... 293
Tyre pressure ... 244
Sun visor ... 57
Sunblind ... 57
Cleaning position ... 102
Opening/closing for Panorama roof system ... 101
Switching child lock (rear doors) on/off ... 25
Switching child protection on/off ... 89
Switching ECON mode on/off
With 2-zone air conditioning ... 70
With 4-zone air conditioning ... 78
With manual air conditioning ... 64
Switching hazard warning lights on/off ... 108
Switching Mono function on/off
With 2-zone air conditioning ... 69
With 4-zone air conditioning ... 77
Switching off protection against towing (inclination sensor) with vehicle key ... 263
Switching off readiness for operation
Vehicles with Porsche Entry & Drive ... 30
Switching on automatic circulating-air mode ... 67
With 2-zone air conditioning ... 69
With 4-zone air conditioning ... 77
Switching on circulating-air mode
With 2-zone air conditioning ... 70
With 4-zone air conditioning ... 78
With manual air conditioning ... 64
Switching on door-surrounding lighting ... 112
Switching on driving light assistant ... 105
Switching on fog lights ... 105
Switching on parking light ... 108

T

Tachometer
Display ... 120
Tail light
Changing bulb ... 351
Installing ... 350
Removing ... 349
Technical data
Capacities ... 372
Dimensions ... 373
Driving performance ... 374
Engine ... 363
Fuel consumption ... 364
Ground clearance ... 370
Transmission ratio ... 364
Tyre pressure (bar/psi) ... 367
Weights ... 369
Telephone ... 160
Telescopic bar
Inserting and adjusting ... 224
Test stands
Brake test ... 201
Performance test ... 201
Tie-down rings, securing points in the luggage compartment ... 223
Tiptronic S
Functional description ... 176
Gear display on the multi-purpose display ... 177
Rocker switches on the steering wheel ... 52
Selector lever ... 177
Transmission ratios ... 364
Tool kit
Compressor (on vehicles without level control) ... 299
Jack ... 298
Screwdriver ... 298
Wedges ... 301
Tools
Compressor (on vehicles without level control) ... 299
Jack ... 298
Screwdriver ... 298
Wedges ... 301
Towing
General information ... 357
Towing bar ... 356
Towing lug ... 358
Towing rope ... 356
Tow-starting, e.g. in case of discharged battery ... 356
Track Data ... 365
Trailer
Definitions ... 243
Effects on Parkassist ... 257
Hitching ... 245
Operation ... 243
Socket (electrical hitch) ... 252
Socket (mechanical hitch) ... 249
Tips on driving ... 244
Trailer load data ... 369
Unhitching ... 245
Vehicle-trailer combination stabilisation, functional description ... 196
Trailer coupling
Extending (electrical hitch) ... 251
Inserting ball hitch (mechanical hitch) ... 247
Removing ball hitch (mechanical hitch) ... 250
Retracting (electrical hitch) ... 251
Socket (mechanical hitch) ... 249
Storage location of ball hitch (mechanical hitch) ... 245
Transmission
Shift pattern ... 175
Transmission ratios ... 364
Transport
Switching off inclination sensor ... 263
Transport (on car trains, ferries, etc.) ... 205
Trip counter
Display ... 123
Resetting ... 123
Two-way radio ... 160
Two-way radios and mobile phones ... 160
Two-zone air conditioning
Air-conditioning sensors ... 71
Defrosting windscreen ... 70
Operating overview ... 67
REST mode ... 71
Setting air distribution ... 69
Setting air quantity ... 68
Setting temperature ... 68
Switching ECON mode on/off ... 70

Switching Mono function on/off 69
Switching on automatic circulating-air mode..... 69
Switching on circulating-air mode..... 70
Using engine residual heat..... 71
Tyre pressure..... 244
Air pressure (bar/psi)..... 367
Plate..... 362
Plate location 362
Warning light on speedometer..... 143
Warning message 153
Tyre Pressure Monitoring
Setting on the multi-purpose display 135
Tyre sealant/sealing set
For defective tyres..... 303
Setting on the multi-purpose display 142
Tyres
Changing..... 308
Fitting spare wheel on spare wheel bracket 317
Flat..... 301
General information..... 292
Inflating (with compressor on vehicles
with air suspension)..... 315
Inscription on radial tyre..... 297
Overview 365
Removing spare wheel from spare wheel bracket .. 317
Removing/fitting spacers 309
Rim offset..... 365
Size..... 365
Snow chains (general information)..... 295
Spare wheel (general information) 317
Storage..... 293
Tracks 365
Winter tyres (general information) 295

U

Ultrasound sensor, ParkAssist..... 255
Undersealing (care instructions)..... 285
Uphill driving, off-road 211
Using engine residual heat
With 2-zone air conditioning 71
With 4-zone air conditioning 78
With manual air conditioning..... 65

V

Vehicle
Charging the battery..... 337
Data bank 361
Identification number location..... 361
Key 29
Laying up..... 288
Lowering with level control..... 204
Raising with level control 203
Raising with the jack 305
Recovering 357
Securing the vehicle against rolling 301
Switching off inclination sensor for transport..... 263
Towing..... 357
Tow-starting..... 356
Transporting 205
Vehicle door
Locking with Porsche Entry & Drive (keyless) 17
Locking with the vehicle key (remote control) 17
Unlocking with Porsche Entry & Drive (keyless)..... 16
Unlocking with the vehicle key (remote control)..... 16
Vehicle key (remote control)
Changing battery 335
Emergency operation of key 167
Locking the vehicle door 17
Opening/closing Panorama roof system..... 100
Opening/closing sliding/lifting roof..... 94
Opening/closing windows
(without Porsche Entry & Drive) 90
Unlocking the vehicle door..... 16
Vehicle-trailer combination stabilisation,
functional description..... 196
Vents, opening/closing..... 80
Voltage indication..... 124
Voltmeter 124

W

Warning - brake proportioning..... 156
Warning messages
Overview 151
Warning triangle (storage location) 290
Washer fluid
Antifreeze 274
Change quantity..... 372
Topping up 274
Washing 283
Water crossing 213
Wedges to prevent rolling..... 301
Wedges to secure the vehicle against rolling..... 301
Weights Data..... 369
Wheels
Changing..... 308
Fitting spare wheel on spare wheel bracket..... 317
Flat..... 301
General information 292
Overview 365
Removing spare wheel from spare wheel bracket... 317
Removing/fitting spacers..... 309
Rim offset..... 365
Security wheel bolt (wrench socket)..... 300
Size..... 365
Snow chains (general information)..... 295
Spare wheel (general information) 317
Storage..... 293
Tracks 365
Wheel bolts (care instructions)..... 300
Winter tyres (general information)..... 295
Windows
Adjusting after connecting battery..... 91
Care instructions..... 285
Opening/closing with rocker switch 88
Opening/closing with vehicle key
(without Porsche Entry & Drive)..... 90
Windscreen washer system
Change quantity..... 372
Windscreen wiper/washer stalk 114
Rain sensor adjustment..... 115
Rear window wiping plus washer system 116
Switching on intermittent operation
of rear window wiper 116
Switching on rain sensor 114

Windscreen wiping plus washer system 116
Windscreen, fast wiping 115
Windscreen, slow wiping 115
Wiping rear window once (one-touch function) 116
Wiping windscreen once (one-touch function) 115
Windscreen wipers
Brief overview 113
Care instructions 285
Rain sensor adjustment 115
Rear window wiping plus washer system 116
Replacing wiper blades at front 277
Stalk 114
Switching on intermittent operation
of rear window wiper 116
Switching on rain sensor 114
Windscreen wiping plus washer system 116
Windscreen, fast wiping 115
Windscreen, slow wiping 115
Wiping rear window once (one-touch function) 116
Wiping windscreen once (one-touch function) 115
Winter driving 333
Winter tyres
Changing tyres 308
General information 295
Overview 365
Storage 293
Tyre pressure 244
Wiper blades
Care instructions 285
Changing (rear) 278
Replacing (front) 277
With Porsche Entry & Drive 15
Wrench socket (security wheel bolt) 300

X

Xenon
Installing headlights 341
Removing headlights 339